blowup-800.imi

Generated by IMITATOR 3.1 "Cheese Artichoke"
Build: HEAD/ec224ec
Generation time: Fri Jul 23, 2021 10:20:05

3 clocks	5 parameters	Initial
x y xabs	p1 p2 p3 t tprime	p1 >= 0 & p2 >= 0 & p3 >= 0 & t >= 0 & tprime >= 0 & x = 0 & y = 0 & xabs = 0

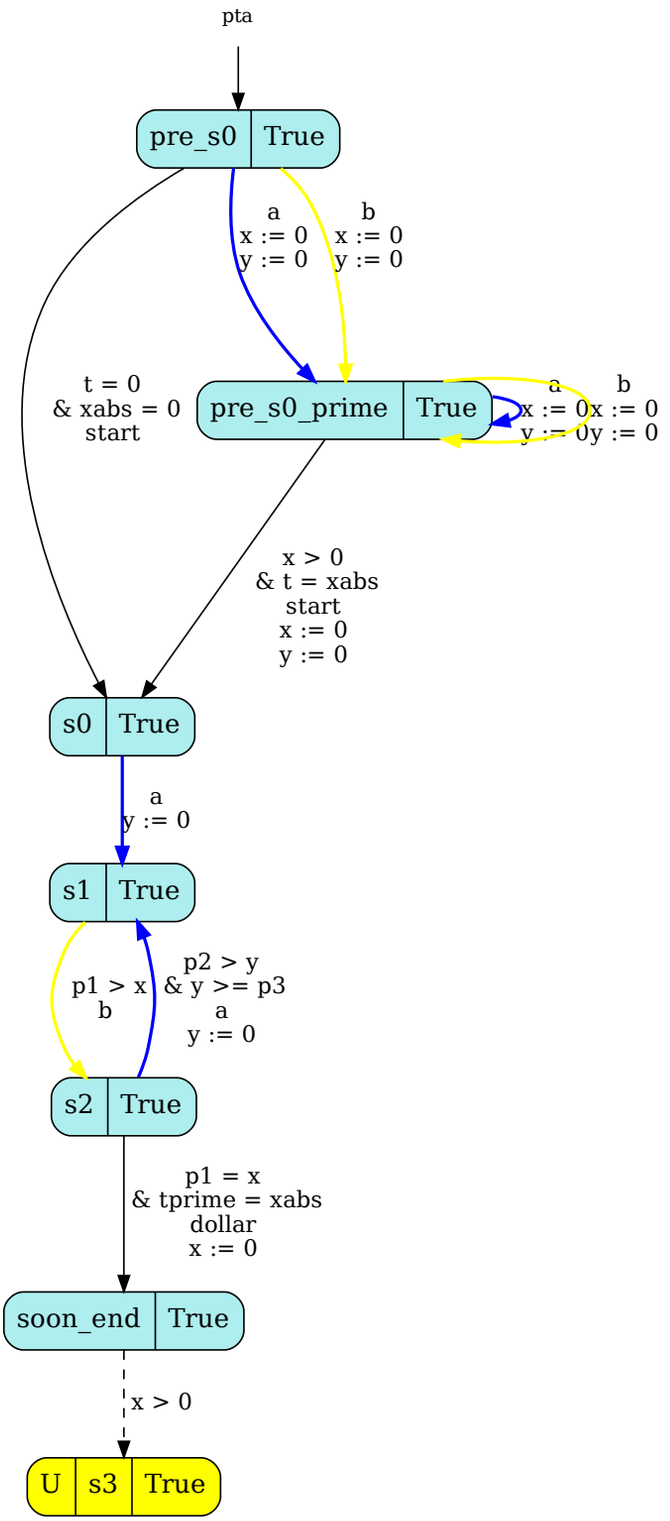

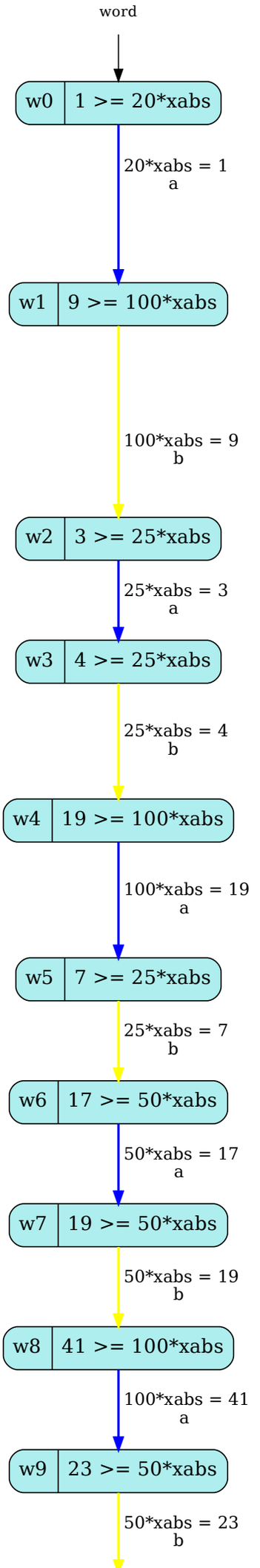

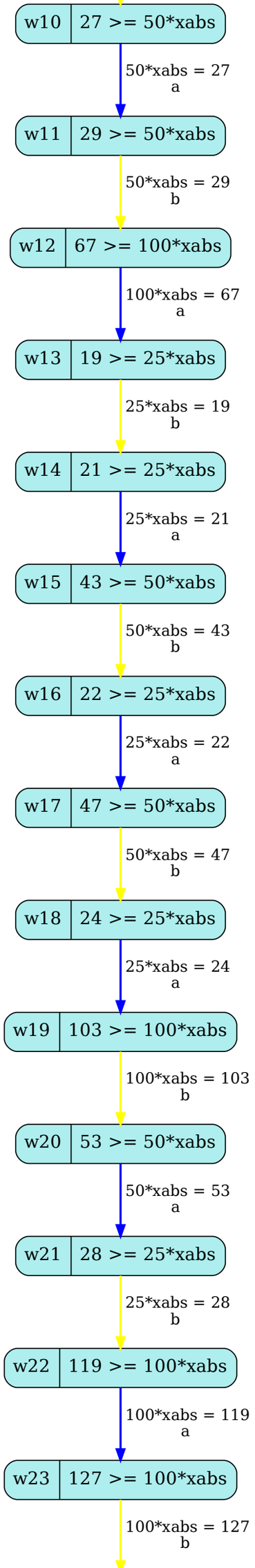
w10
27 >= 50*xabs
50*xabs = 27
a
w11
29 >= 50*xabs
50*xabs = 29
b
w12
67 >= 100*xabs
100*xabs = 67
a
w13
19 >= 25*xabs
25*xabs = 19
b
w14
21 >= 25*xabs
25*xabs = 21
a
w15
43 >= 50*xabs
50*xabs = 43
b
w16
22 >= 25*xabs
25*xabs = 22
a
w17
47 >= 50*xabs
50*xabs = 47
b
w18
24 >= 25*xabs
25*xabs = 24
a
w19
103 >= 100*xabs
100*xabs = 103
b
w20
53 >= 50*xabs
50*xabs = 53
a
w21
28 >= 25*xabs
25*xabs = 28
b
w22
119 >= 100*xabs
100*xabs = 119
a
w23
127 >= 100*xabs
100*xabs = 127
b

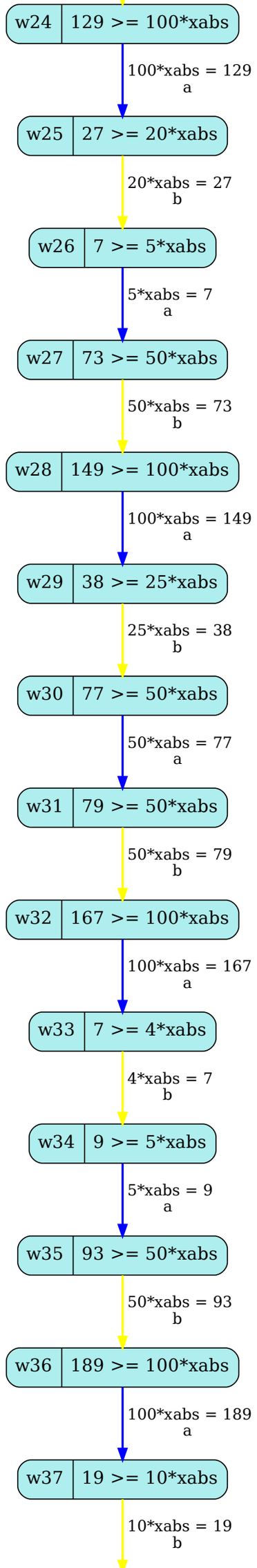
w24
129 >= 100*xabs
100*xabs = 129
a
w25
27 >= 20*xabs
20*xabs = 27
b
w26
7 >= 5*xabs
5*xabs = 7
a
w27
73 >= 50*xabs
50*xabs = 73
b
w28
149 >= 100*xabs
100*xabs = 149
a
w29
38 >= 25*xabs
25*xabs = 38
b
w30
77 >= 50*xabs
50*xabs = 77
a
w31
79 >= 50*xabs
50*xabs = 79
b
w32
167 >= 100*xabs
100*xabs = 167
a
w33
7 >= 4*xabs
4*xabs = 7
b
w34
9 >= 5*xabs
5*xabs = 9
a
w35
93 >= 50*xabs
50*xabs = 93
b
w36
189 >= 100*xabs
100*xabs = 189
a
w37
19 >= 10*xabs
10*xabs = 19
b

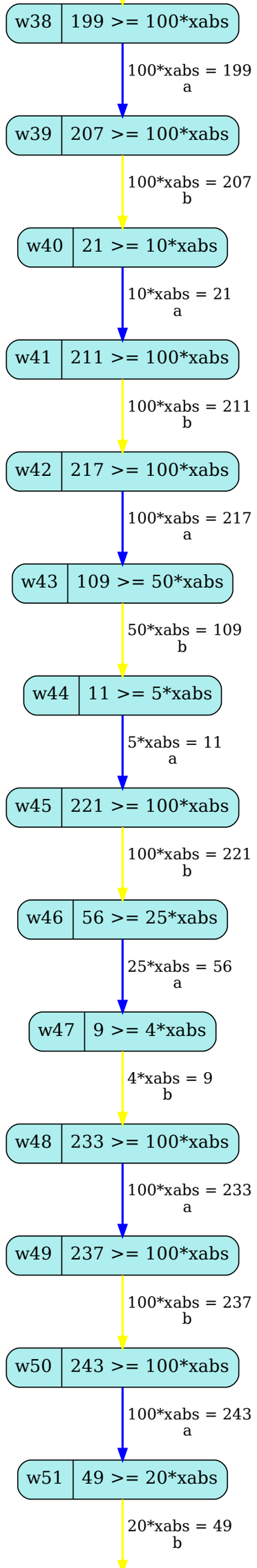
w38
199 >= 100*xabs
100*xabs = 199
a
w39
207 >= 100*xabs
100*xabs = 207
b
w40
21 >= 10*xabs
10*xabs = 21
a
w41
211 >= 100*xabs
100*xabs = 211
b
w42
217 >= 100*xabs
100*xabs = 217
a
w43
109 >= 50*xabs
50*xabs = 109
b
w44
11 >= 5*xabs
5*xabs = 11
a
w45
221 >= 100*xabs
100*xabs = 221
b
w46
56 >= 25*xabs
25*xabs = 56
a
w47
9 >= 4*xabs
4*xabs = 9
b
w48
233 >= 100*xabs
100*xabs = 233
a
w49
237 >= 100*xabs
100*xabs = 237
b
w50
243 >= 100*xabs
100*xabs = 243
a
w51
49 >= 20*xabs
20*xabs = 49
b

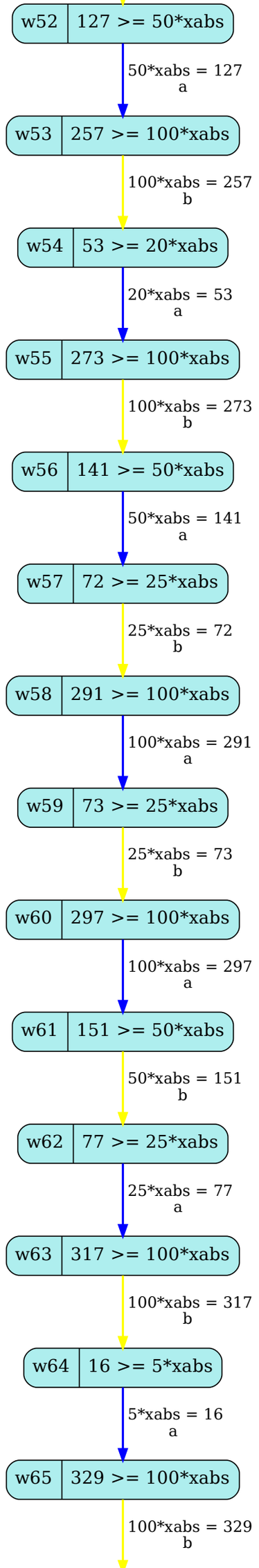
w52
127 >= 50*xabs
50*xabs = 127
a
w53
257 >= 100*xabs
100*xabs = 257
b
w54
53 >= 20*xabs
20*xabs = 53
a
w55
273 >= 100*xabs
100*xabs = 273
b
w56
141 >= 50*xabs
50*xabs = 141
a
w57
72 >= 25*xabs
25*xabs = 72
b
w58
291 >= 100*xabs
100*xabs = 291
a
w59
73 >= 25*xabs
25*xabs = 73
b
w60
297 >= 100*xabs
100*xabs = 297
a
w61
151 >= 50*xabs
50*xabs = 151
b
w62
77 >= 25*xabs
25*xabs = 77
a
w63
317 >= 100*xabs
100*xabs = 317
b
w64
16 >= 5*xabs
5*xabs = 16
a
w65
329 >= 100*xabs
100*xabs = 329
b

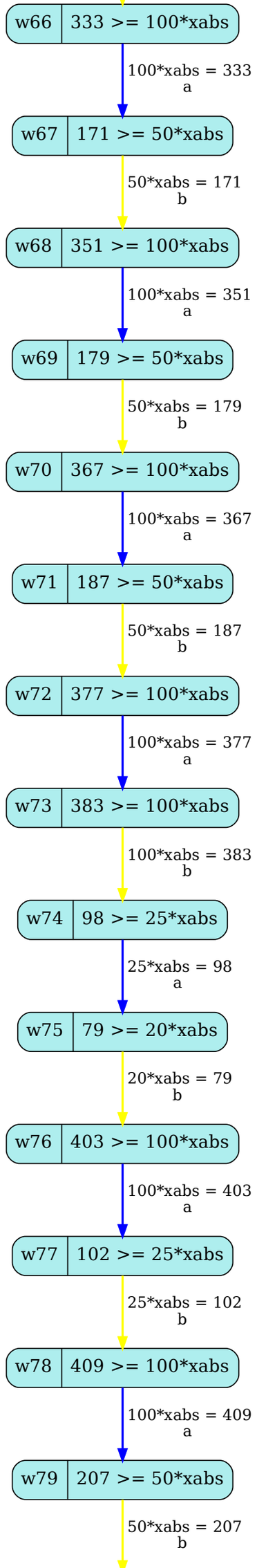
w66
333 >= 100*xabs
100*xabs = 333
a
w67
171 >= 50*xabs
50*xabs = 171
b
w68
351 >= 100*xabs
100*xabs = 351
a
w69
179 >= 50*xabs
50*xabs = 179
b
w70
367 >= 100*xabs
100*xabs = 367
a
w71
187 >= 50*xabs
50*xabs = 187
b
w72
377 >= 100*xabs
100*xabs = 377
a
w73
383 >= 100*xabs
100*xabs = 383
b
w74
98 >= 25*xabs
25*xabs = 98
a
w75
79 >= 20*xabs
20*xabs = 79
b
w76
403 >= 100*xabs
100*xabs = 403
a
w77
102 >= 25*xabs
25*xabs = 102
b
w78
409 >= 100*xabs
100*xabs = 409
a
w79
207 >= 50*xabs
50*xabs = 207
b

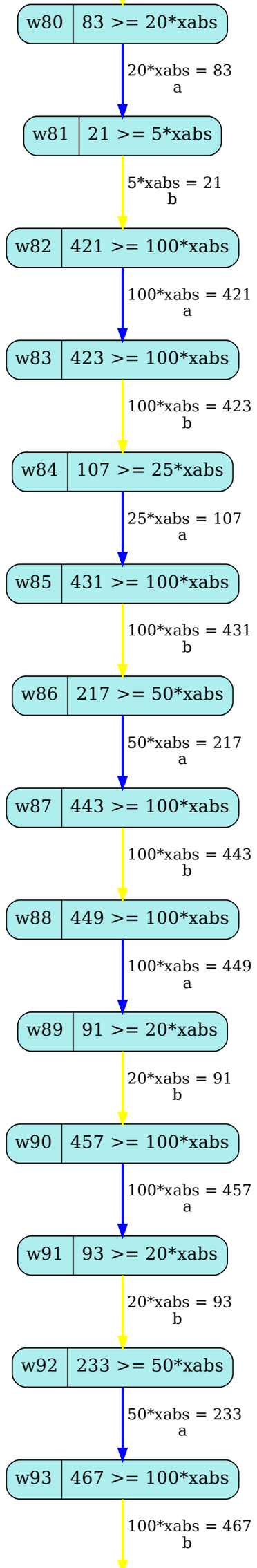
w80
83 >= 20*xabs
20*xabs = 83
a
w81
21 >= 5*xabs
5*xabs = 21
b
w82
421 >= 100*xabs
100*xabs = 421
a
w83
423 >= 100*xabs
100*xabs = 423
b
w84
107 >= 25*xabs
25*xabs = 107
a
w85
431 >= 100*xabs
100*xabs = 431
b
w86
217 >= 50*xabs
50*xabs = 217
a
w87
443 >= 100*xabs
100*xabs = 443
b
w88
449 >= 100*xabs
100*xabs = 449
a
w89
91 >= 20*xabs
20*xabs = 91
b
w90
457 >= 100*xabs
100*xabs = 457
a
w91
93 >= 20*xabs
20*xabs = 93
b
w92
233 >= 50*xabs
50*xabs = 233
a
w93
467 >= 100*xabs
100*xabs = 467
b

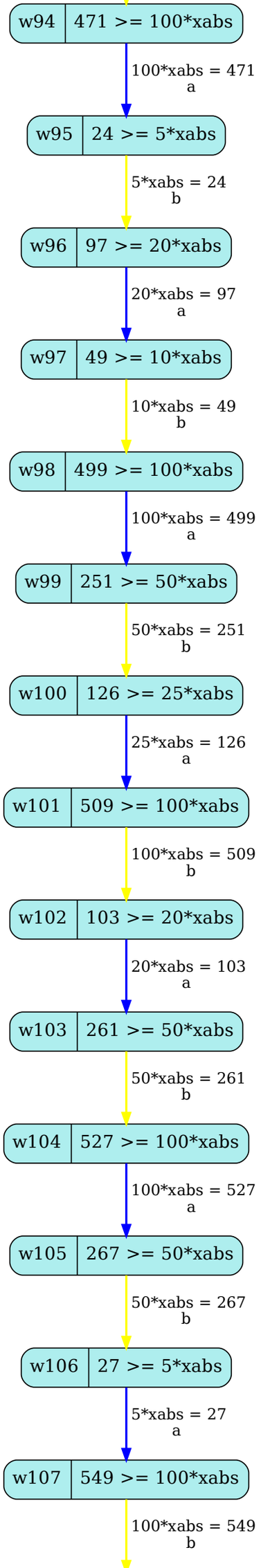
w94
471 >= 100*xabs
100*xabs = 471
a
w95
24 >= 5*xabs
5*xabs = 24
b
w96
97 >= 20*xabs
20*xabs = 97
a
w97
49 >= 10*xabs
10*xabs = 49
b
w98
499 >= 100*xabs
100*xabs = 499
a
w99
251 >= 50*xabs
50*xabs = 251
b
w100
126 >= 25*xabs
25*xabs = 126
a
w101
509 >= 100*xabs
100*xabs = 509
b
w102
103 >= 20*xabs
20*xabs = 103
a
w103
261 >= 50*xabs
50*xabs = 261
b
w104
527 >= 100*xabs
100*xabs = 527
a
w105
267 >= 50*xabs
50*xabs = 267
b
w106
27 >= 5*xabs
5*xabs = 27
a
w107
549 >= 100*xabs
100*xabs = 549
b

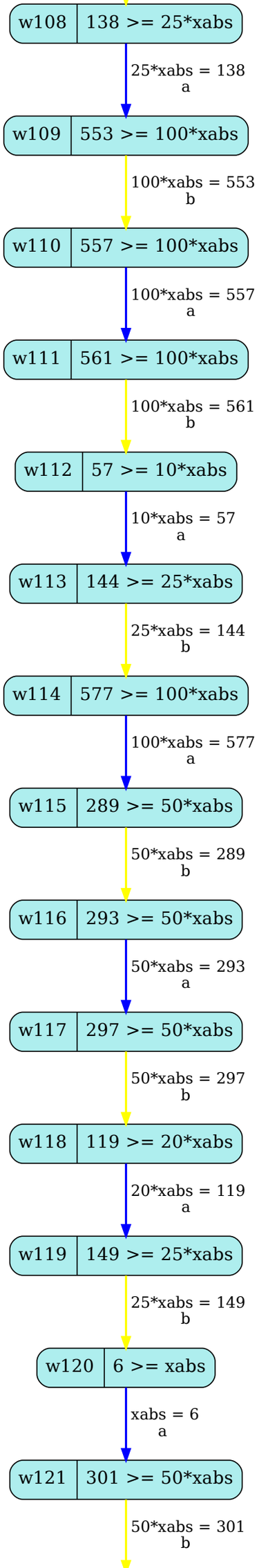
w108
138 >= 25*xabs
25*xabs = 138
a
w109
553 >= 100*xabs
100*xabs = 553
b
w110
557 >= 100*xabs
100*xabs = 557
a
w111
561 >= 100*xabs
100*xabs = 561
b
w112
57 >= 10*xabs
10*xabs = 57
a
w113
144 >= 25*xabs
25*xabs = 144
b
w114
577 >= 100*xabs
100*xabs = 577
a
w115
289 >= 50*xabs
50*xabs = 289
b
w116
293 >= 50*xabs
50*xabs = 293
a
w117
297 >= 50*xabs
50*xabs = 297
b
w118
119 >= 20*xabs
20*xabs = 119
a
w119
149 >= 25*xabs
25*xabs = 149
b
w120
6 >= xabs
xabs = 6
a
w121
301 >= 50*xabs
50*xabs = 301
b

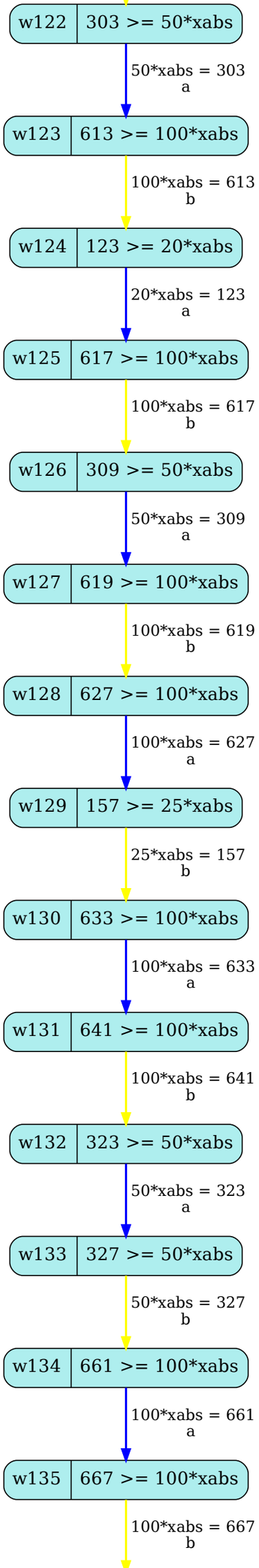
w122
303 >= 50*xabs
50*xabs = 303
a
w123
613 >= 100*xabs
100*xabs = 613
b
w124
123 >= 20*xabs
20*xabs = 123
a
w125
617 >= 100*xabs
100*xabs = 617
b
w126
309 >= 50*xabs
50*xabs = 309
a
w127
619 >= 100*xabs
100*xabs = 619
b
w128
627 >= 100*xabs
100*xabs = 627
a
w129
157 >= 25*xabs
25*xabs = 157
b
w130
633 >= 100*xabs
100*xabs = 633
a
w131
641 >= 100*xabs
100*xabs = 641
b
w132
323 >= 50*xabs
50*xabs = 323
a
w133
327 >= 50*xabs
50*xabs = 327
b
w134
661 >= 100*xabs
100*xabs = 661
a
w135
667 >= 100*xabs
100*xabs = 667
b

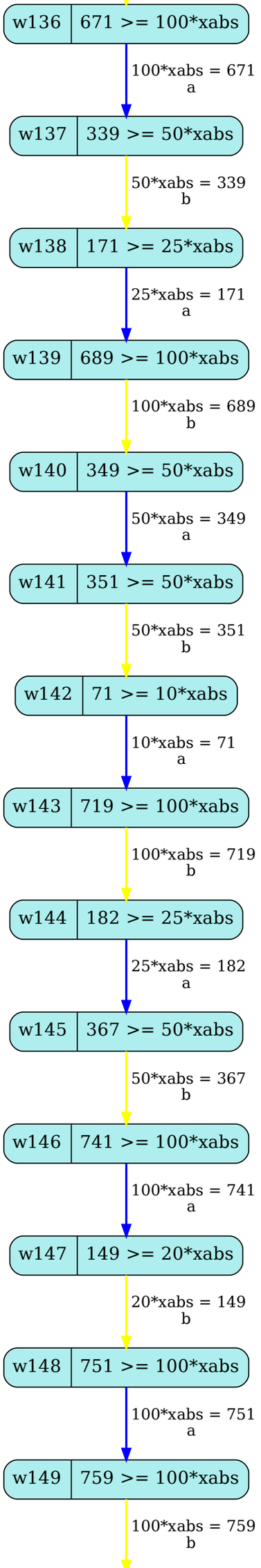
w136
671 >= 100*xabs
100*xabs = 671
a
w137
339 >= 50*xabs
50*xabs = 339
b
w138
171 >= 25*xabs
25*xabs = 171
a
w139
689 >= 100*xabs
100*xabs = 689
b
w140
349 >= 50*xabs
50*xabs = 349
a
w141
351 >= 50*xabs
50*xabs = 351
b
w142
71 >= 10*xabs
10*xabs = 71
a
w143
719 >= 100*xabs
100*xabs = 719
b
w144
182 >= 25*xabs
25*xabs = 182
a
w145
367 >= 50*xabs
50*xabs = 367
b
w146
741 >= 100*xabs
100*xabs = 741
a
w147
149 >= 20*xabs
20*xabs = 149
b
w148
751 >= 100*xabs
100*xabs = 751
a
w149
759 >= 100*xabs
100*xabs = 759
b

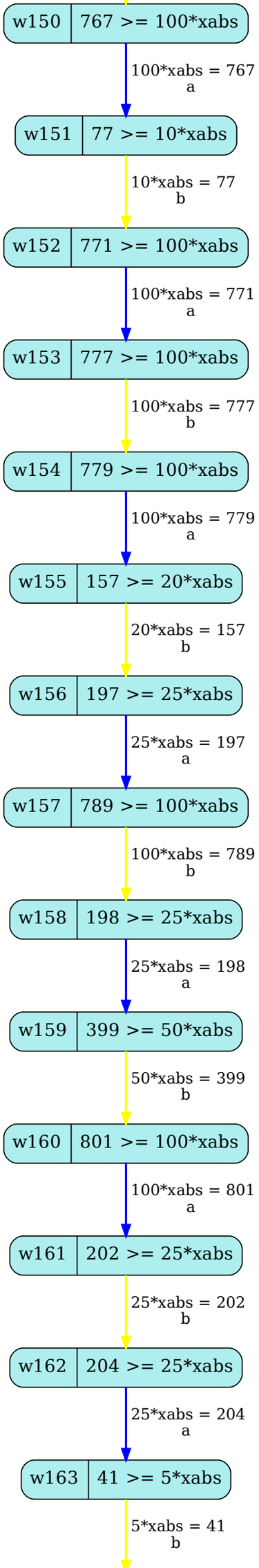
w150
767 >= 100*xabs
100*xabs = 767
a
w151
77 >= 10*xabs
10*xabs = 77
b
w152
771 >= 100*xabs
100*xabs = 771
a
w153
777 >= 100*xabs
100*xabs = 777
b
w154
779 >= 100*xabs
100*xabs = 779
a
w155
157 >= 20*xabs
20*xabs = 157
b
w156
197 >= 25*xabs
25*xabs = 197
a
w157
789 >= 100*xabs
100*xabs = 789
b
w158
198 >= 25*xabs
25*xabs = 198
a
w159
399 >= 50*xabs
50*xabs = 399
b
w160
801 >= 100*xabs
100*xabs = 801
a
w161
202 >= 25*xabs
25*xabs = 202
b
w162
204 >= 25*xabs
25*xabs = 204
a
w163
41 >= 5*xabs
5*xabs = 41
b

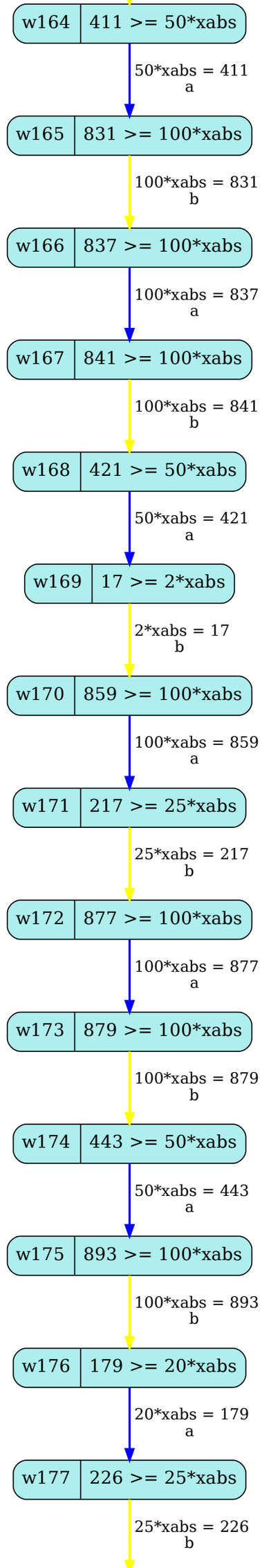
w164
411 >= 50*xabs
50*xabs = 411
a
w165
831 >= 100*xabs
100*xabs = 831
b
w166
837 >= 100*xabs
100*xabs = 837
a
w167
841 >= 100*xabs
100*xabs = 841
b
w168
421 >= 50*xabs
50*xabs = 421
a
w169
17 >= 2*xabs
2*xabs = 17
b
w170
859 >= 100*xabs
100*xabs = 859
a
w171
217 >= 25*xabs
25*xabs = 217
b
w172
877 >= 100*xabs
100*xabs = 877
a
w173
879 >= 100*xabs
100*xabs = 879
b
w174
443 >= 50*xabs
50*xabs = 443
a
w175
893 >= 100*xabs
100*xabs = 893
b
w176
179 >= 20*xabs
20*xabs = 179
a
w177
226 >= 25*xabs
25*xabs = 226
b

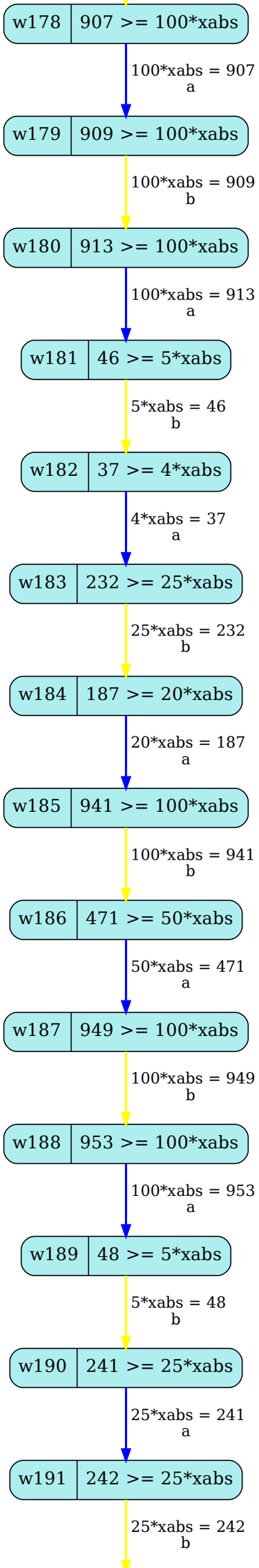
w178
907 >= 100*xabs
100*xabs = 907
a
w179
909 >= 100*xabs
100*xabs = 909
b
w180
913 >= 100*xabs
100*xabs = 913
a
w181
46 >= 5*xabs
5*xabs = 46
b
w182
37 >= 4*xabs
4*xabs = 37
a
w183
232 >= 25*xabs
25*xabs = 232
b
w184
187 >= 20*xabs
20*xabs = 187
a
w185
941 >= 100*xabs
100*xabs = 941
b
w186
471 >= 50*xabs
50*xabs = 471
a
w187
949 >= 100*xabs
100*xabs = 949
b
w188
953 >= 100*xabs
100*xabs = 953
a
w189
48 >= 5*xabs
5*xabs = 48
b
w190
241 >= 25*xabs
25*xabs = 241
a
w191
242 >= 25*xabs
25*xabs = 242
b

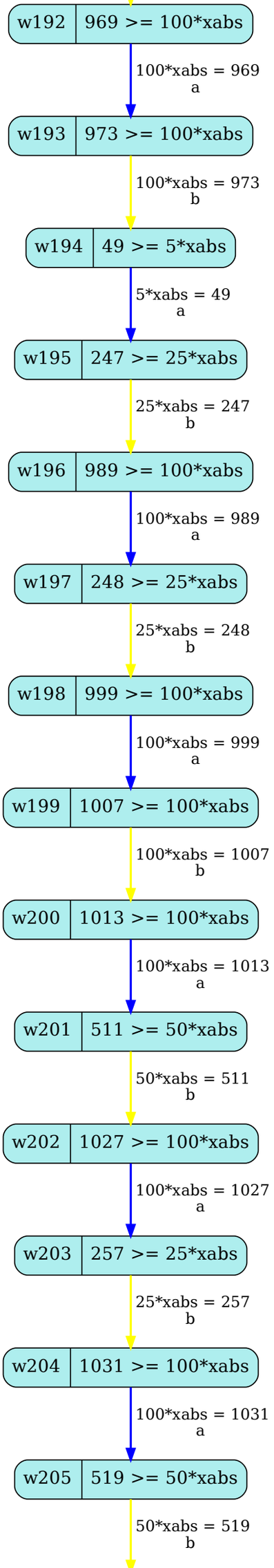
w192
969 >= 100*xabs
100*xabs = 969
a
w193
973 >= 100*xabs
100*xabs = 973
b
w194
49 >= 5*xabs
5*xabs = 49
a
w195
247 >= 25*xabs
25*xabs = 247
b
w196
989 >= 100*xabs
100*xabs = 989
a
w197
248 >= 25*xabs
25*xabs = 248
b
w198
999 >= 100*xabs
100*xabs = 999
a
w199
1007 >= 100*xabs
100*xabs = 1007
b
w200
1013 >= 100*xabs
100*xabs = 1013
a
w201
511 >= 50*xabs
50*xabs = 511
b
w202
1027 >= 100*xabs
100*xabs = 1027
a
w203
257 >= 25*xabs
25*xabs = 257
b
w204
1031 >= 100*xabs
100*xabs = 1031
a
w205
519 >= 50*xabs
50*xabs = 519
b

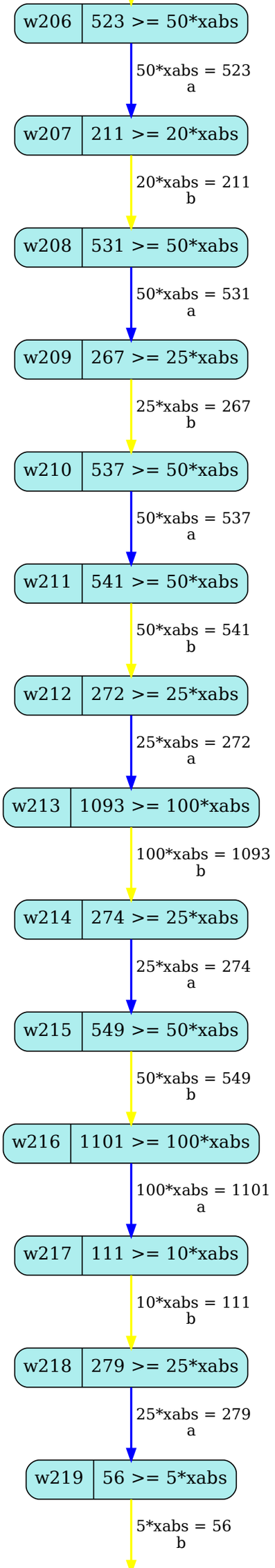
w206
523 >= 50*xabs
50*xabs = 523
a
w207
211 >= 20*xabs
20*xabs = 211
b
w208
531 >= 50*xabs
50*xabs = 531
a
w209
267 >= 25*xabs
25*xabs = 267
b
w210
537 >= 50*xabs
50*xabs = 537
a
w211
541 >= 50*xabs
50*xabs = 541
b
w212
272 >= 25*xabs
25*xabs = 272
a
w213
1093 >= 100*xabs
100*xabs = 1093
b
w214
274 >= 25*xabs
25*xabs = 274
a
w215
549 >= 50*xabs
50*xabs = 549
b
w216
1101 >= 100*xabs
100*xabs = 1101
a
w217
111 >= 10*xabs
10*xabs = 111
b
w218
279 >= 25*xabs
25*xabs = 279
a
w219
56 >= 5*xabs
5*xabs = 56
b

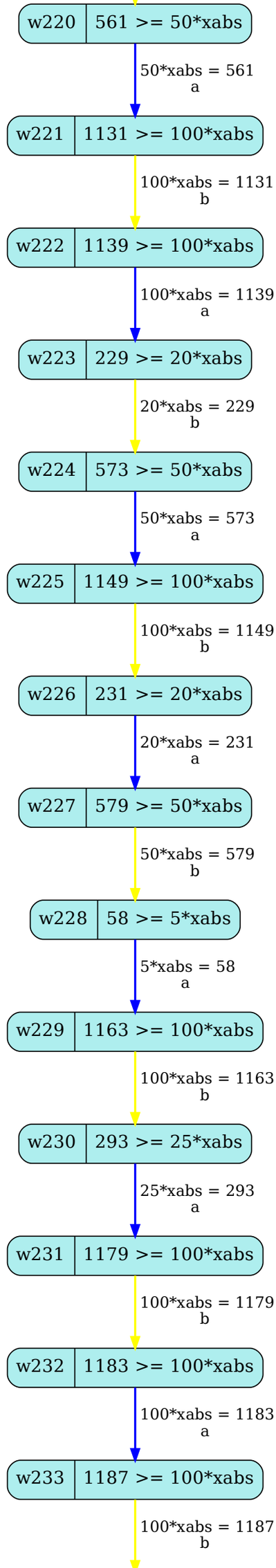
w220
561 >= 50*xabs
50*xabs = 561
a
w221
1131 >= 100*xabs
100*xabs = 1131
b
w222
1139 >= 100*xabs
100*xabs = 1139
a
w223
229 >= 20*xabs
20*xabs = 229
b
w224
573 >= 50*xabs
50*xabs = 573
a
w225
1149 >= 100*xabs
100*xabs = 1149
b
w226
231 >= 20*xabs
20*xabs = 231
a
w227
579 >= 50*xabs
50*xabs = 579
b
w228
58 >= 5*xabs
5*xabs = 58
a
w229
1163 >= 100*xabs
100*xabs = 1163
b
w230
293 >= 25*xabs
25*xabs = 293
a
w231
1179 >= 100*xabs
100*xabs = 1179
b
w232
1183 >= 100*xabs
100*xabs = 1183
a
w233
1187 >= 100*xabs
100*xabs = 1187
b

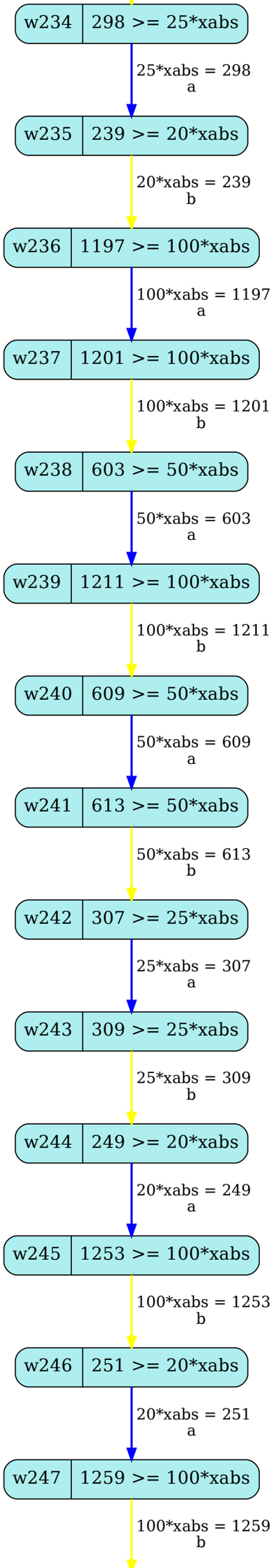
w234
298 >= 25*xabs
25*xabs = 298
a
w235
239 >= 20*xabs
20*xabs = 239
b
w236
1197 >= 100*xabs
100*xabs = 1197
a
w237
1201 >= 100*xabs
100*xabs = 1201
b
w238
603 >= 50*xabs
50*xabs = 603
a
w239
1211 >= 100*xabs
100*xabs = 1211
b
w240
609 >= 50*xabs
50*xabs = 609
a
w241
613 >= 50*xabs
50*xabs = 613
b
w242
307 >= 25*xabs
25*xabs = 307
a
w243
309 >= 25*xabs
25*xabs = 309
b
w244
249 >= 20*xabs
20*xabs = 249
a
w245
1253 >= 100*xabs
100*xabs = 1253
b
w246
251 >= 20*xabs
20*xabs = 251
a
w247
1259 >= 100*xabs
100*xabs = 1259
b

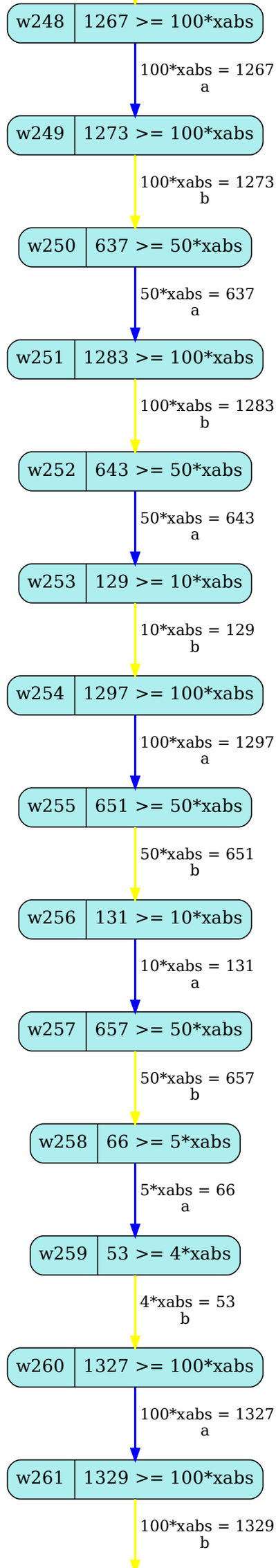
w248
1267 >= 100*xabs
100*xabs = 1267
a
w249
1273 >= 100*xabs
100*xabs = 1273
b
w250
637 >= 50*xabs
50*xabs = 637
a
w251
1283 >= 100*xabs
100*xabs = 1283
b
w252
643 >= 50*xabs
50*xabs = 643
a
w253
129 >= 10*xabs
10*xabs = 129
b
w254
1297 >= 100*xabs
100*xabs = 1297
a
w255
651 >= 50*xabs
50*xabs = 651
b
w256
131 >= 10*xabs
10*xabs = 131
a
w257
657 >= 50*xabs
50*xabs = 657
b
w258
66 >= 5*xabs
5*xabs = 66
a
w259
53 >= 4*xabs
4*xabs = 53
b
w260
1327 >= 100*xabs
100*xabs = 1327
a
w261
1329 >= 100*xabs
100*xabs = 1329
b

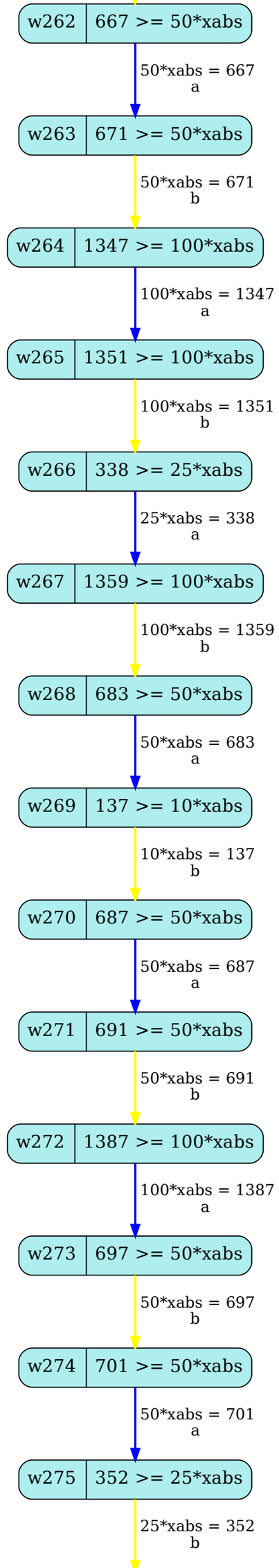
w262
667 >= 50*xabs
50*xabs = 667
a
w263
671 >= 50*xabs
50*xabs = 671
b
w264
1347 >= 100*xabs
100*xabs = 1347
a
w265
1351 >= 100*xabs
100*xabs = 1351
b
w266
338 >= 25*xabs
25*xabs = 338
a
w267
1359 >= 100*xabs
100*xabs = 1359
b
w268
683 >= 50*xabs
50*xabs = 683
a
w269
137 >= 10*xabs
10*xabs = 137
b
w270
687 >= 50*xabs
50*xabs = 687
a
w271
691 >= 50*xabs
50*xabs = 691
b
w272
1387 >= 100*xabs
100*xabs = 1387
a
w273
697 >= 50*xabs
50*xabs = 697
b
w274
701 >= 50*xabs
50*xabs = 701
a
w275
352 >= 25*xabs
25*xabs = 352
b

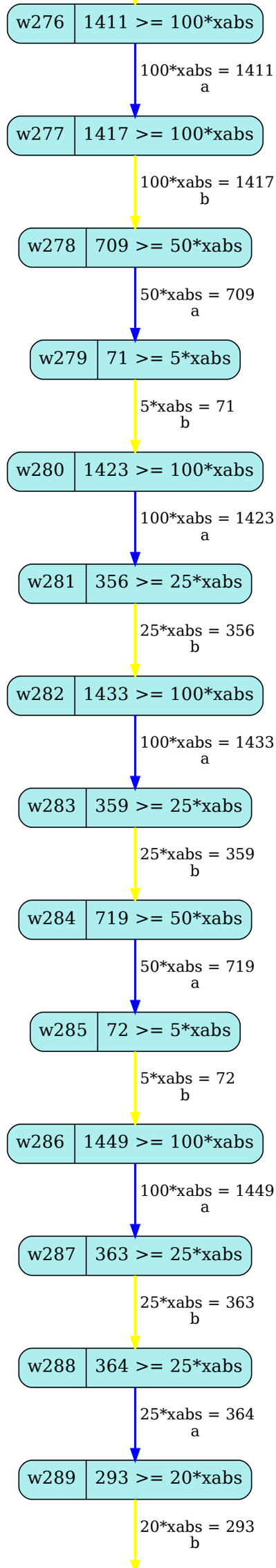
w276
1411 >= 100*xabs
100*xabs = 1411
a
w277
1417 >= 100*xabs
100*xabs = 1417
b
w278
709 >= 50*xabs
50*xabs = 709
a
w279
71 >= 5*xabs
5*xabs = 71
b
w280
1423 >= 100*xabs
100*xabs = 1423
a
w281
356 >= 25*xabs
25*xabs = 356
b
w282
1433 >= 100*xabs
100*xabs = 1433
a
w283
359 >= 25*xabs
25*xabs = 359
b
w284
719 >= 50*xabs
50*xabs = 719
a
w285
72 >= 5*xabs
5*xabs = 72
b
w286
1449 >= 100*xabs
100*xabs = 1449
a
w287
363 >= 25*xabs
25*xabs = 363
b
w288
364 >= 25*xabs
25*xabs = 364
a
w289
293 >= 20*xabs
20*xabs = 293
b

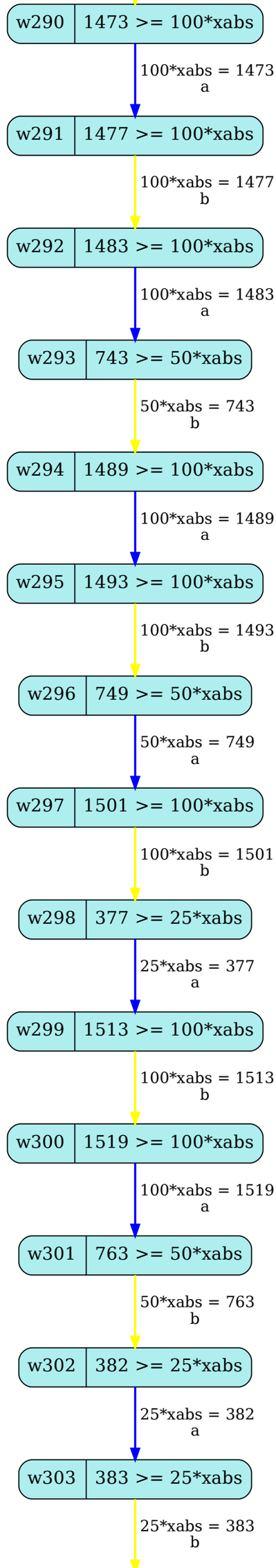
w290
1473 >= 100*xabs
100*xabs = 1473
a
w291
1477 >= 100*xabs
100*xabs = 1477
b
w292
1483 >= 100*xabs
100*xabs = 1483
a
w293
743 >= 50*xabs
50*xabs = 743
b
w294
1489 >= 100*xabs
100*xabs = 1489
a
w295
1493 >= 100*xabs
100*xabs = 1493
b
w296
749 >= 50*xabs
50*xabs = 749
a
w297
1501 >= 100*xabs
100*xabs = 1501
b
w298
377 >= 25*xabs
25*xabs = 377
a
w299
1513 >= 100*xabs
100*xabs = 1513
b
w300
1519 >= 100*xabs
100*xabs = 1519
a
w301
763 >= 50*xabs
50*xabs = 763
b
w302
382 >= 25*xabs
25*xabs = 382
a
w303
383 >= 25*xabs
25*xabs = 383
b

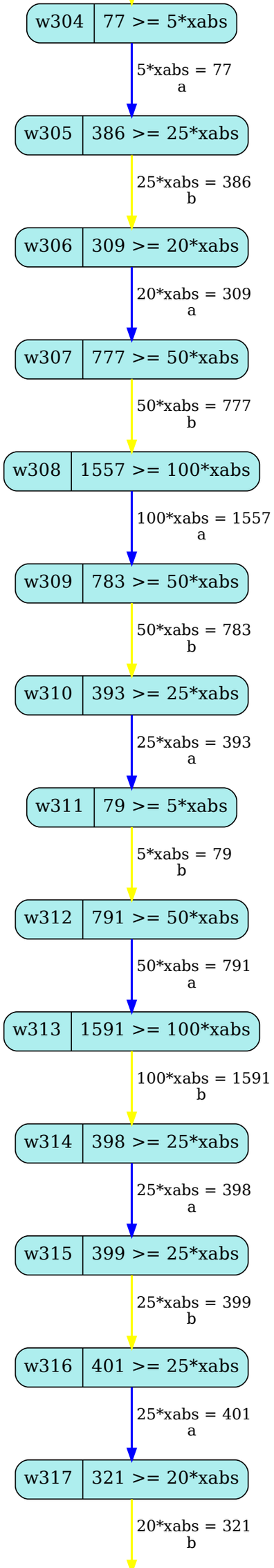
w304
77 >= 5*xabs
5*xabs = 77
a
w305
386 >= 25*xabs
25*xabs = 386
b
w306
309 >= 20*xabs
20*xabs = 309
a
w307
777 >= 50*xabs
50*xabs = 777
b
w308
1557 >= 100*xabs
100*xabs = 1557
a
w309
783 >= 50*xabs
50*xabs = 783
b
w310
393 >= 25*xabs
25*xabs = 393
a
w311
79 >= 5*xabs
5*xabs = 79
b
w312
791 >= 50*xabs
50*xabs = 791
a
w313
1591 >= 100*xabs
100*xabs = 1591
b
w314
398 >= 25*xabs
25*xabs = 398
a
w315
399 >= 25*xabs
25*xabs = 399
b
w316
401 >= 25*xabs
25*xabs = 401
a
w317
321 >= 20*xabs
20*xabs = 321
b

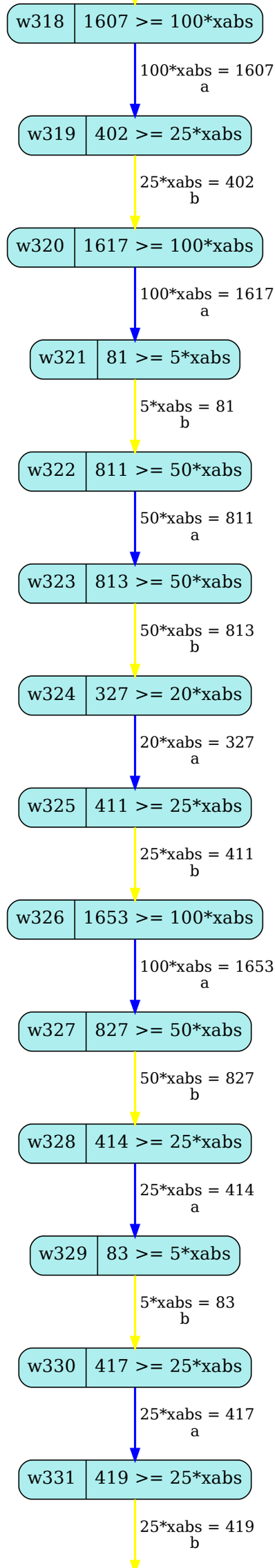
w318
1607 >= 100*xabs
100*xabs = 1607
a
w319
402 >= 25*xabs
25*xabs = 402
b
w320
1617 >= 100*xabs
100*xabs = 1617
a
w321
81 >= 5*xabs
5*xabs = 81
b
w322
811 >= 50*xabs
50*xabs = 811
a
w323
813 >= 50*xabs
50*xabs = 813
b
w324
327 >= 20*xabs
20*xabs = 327
a
w325
411 >= 25*xabs
25*xabs = 411
b
w326
1653 >= 100*xabs
100*xabs = 1653
a
w327
827 >= 50*xabs
50*xabs = 827
b
w328
414 >= 25*xabs
25*xabs = 414
a
w329
83 >= 5*xabs
5*xabs = 83
b
w330
417 >= 25*xabs
25*xabs = 417
a
w331
419 >= 25*xabs
25*xabs = 419
b

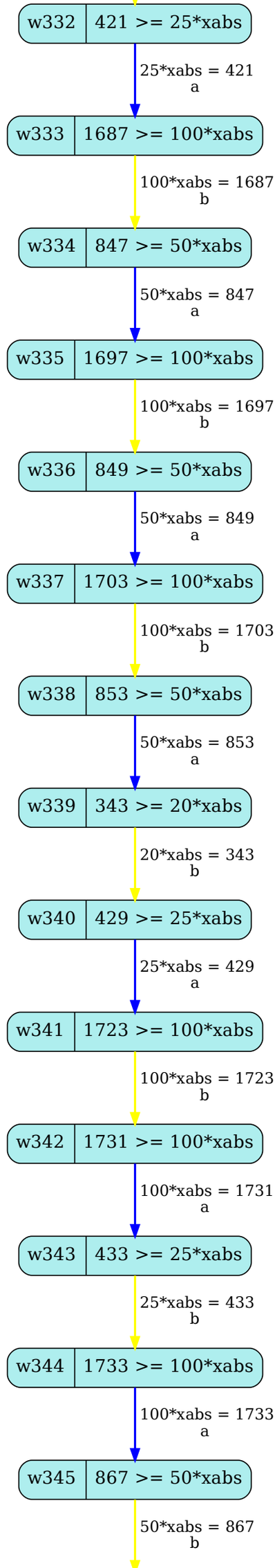
w332
421 >= 25*xabs
25*xabs = 421
a
w333
1687 >= 100*xabs
100*xabs = 1687
b
w334
847 >= 50*xabs
50*xabs = 847
a
w335
1697 >= 100*xabs
100*xabs = 1697
b
w336
849 >= 50*xabs
50*xabs = 849
a
w337
1703 >= 100*xabs
100*xabs = 1703
b
w338
853 >= 50*xabs
50*xabs = 853
a
w339
343 >= 20*xabs
20*xabs = 343
b
w340
429 >= 25*xabs
25*xabs = 429
a
w341
1723 >= 100*xabs
100*xabs = 1723
b
w342
1731 >= 100*xabs
100*xabs = 1731
a
w343
433 >= 25*xabs
25*xabs = 433
b
w344
1733 >= 100*xabs
100*xabs = 1733
a
w345
867 >= 50*xabs
50*xabs = 867
b

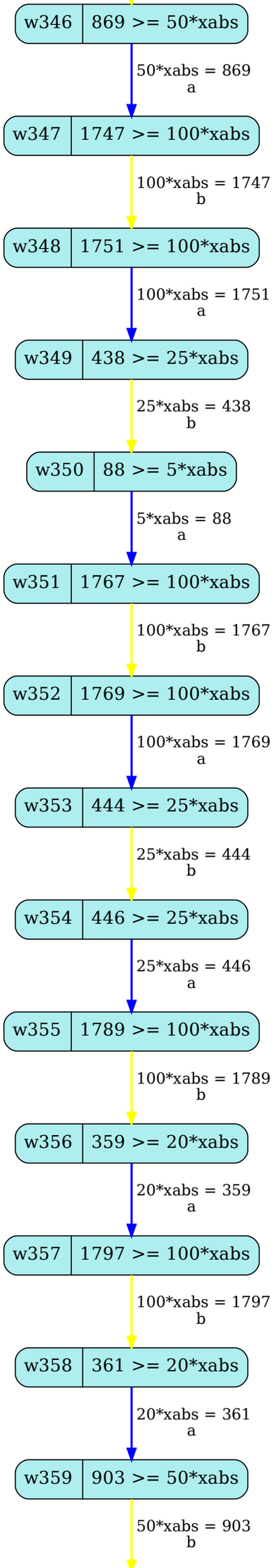
w346
869 >= 50*xabs
50*xabs = 869
a
w347
1747 >= 100*xabs
100*xabs = 1747
b
w348
1751 >= 100*xabs
100*xabs = 1751
a
w349
438 >= 25*xabs
25*xabs = 438
b
w350
88 >= 5*xabs
5*xabs = 88
a
w351
1767 >= 100*xabs
100*xabs = 1767
b
w352
1769 >= 100*xabs
100*xabs = 1769
a
w353
444 >= 25*xabs
25*xabs = 444
b
w354
446 >= 25*xabs
25*xabs = 446
a
w355
1789 >= 100*xabs
100*xabs = 1789
b
w356
359 >= 20*xabs
20*xabs = 359
a
w357
1797 >= 100*xabs
100*xabs = 1797
b
w358
361 >= 20*xabs
20*xabs = 361
a
w359
903 >= 50*xabs
50*xabs = 903
b

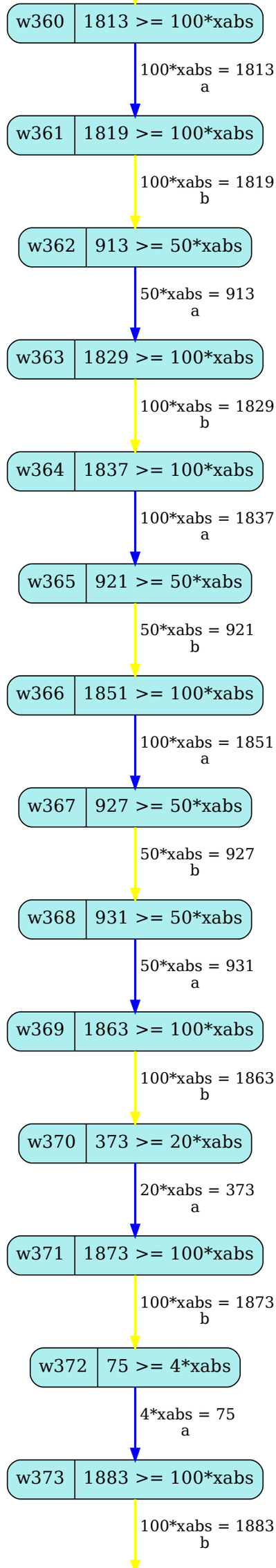
w360
1813 >= 100*xabs
100*xabs = 1813
a
w361
1819 >= 100*xabs
100*xabs = 1819
b
w362
913 >= 50*xabs
50*xabs = 913
a
w363
1829 >= 100*xabs
100*xabs = 1829
b
w364
1837 >= 100*xabs
100*xabs = 1837
a
w365
921 >= 50*xabs
50*xabs = 921
b
w366
1851 >= 100*xabs
100*xabs = 1851
a
w367
927 >= 50*xabs
50*xabs = 927
b
w368
931 >= 50*xabs
50*xabs = 931
a
w369
1863 >= 100*xabs
100*xabs = 1863
b
w370
373 >= 20*xabs
20*xabs = 373
a
w371
1873 >= 100*xabs
100*xabs = 1873
b
w372
75 >= 4*xabs
4*xabs = 75
a
w373
1883 >= 100*xabs
100*xabs = 1883
b

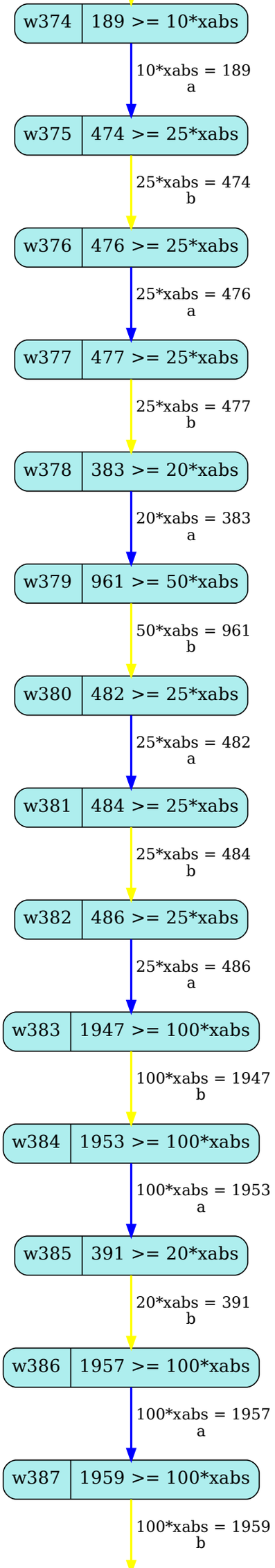
w374
189 >= 10*xabs
10*xabs = 189
a
w375
474 >= 25*xabs
25*xabs = 474
b
w376
476 >= 25*xabs
25*xabs = 476
a
w377
477 >= 25*xabs
25*xabs = 477
b
w378
383 >= 20*xabs
20*xabs = 383
a
w379
961 >= 50*xabs
50*xabs = 961
b
w380
482 >= 25*xabs
25*xabs = 482
a
w381
484 >= 25*xabs
25*xabs = 484
b
w382
486 >= 25*xabs
25*xabs = 486
a
w383
1947 >= 100*xabs
100*xabs = 1947
b
w384
1953 >= 100*xabs
100*xabs = 1953
a
w385
391 >= 20*xabs
20*xabs = 391
b
w386
1957 >= 100*xabs
100*xabs = 1957
a
w387
1959 >= 100*xabs
100*xabs = 1959
b

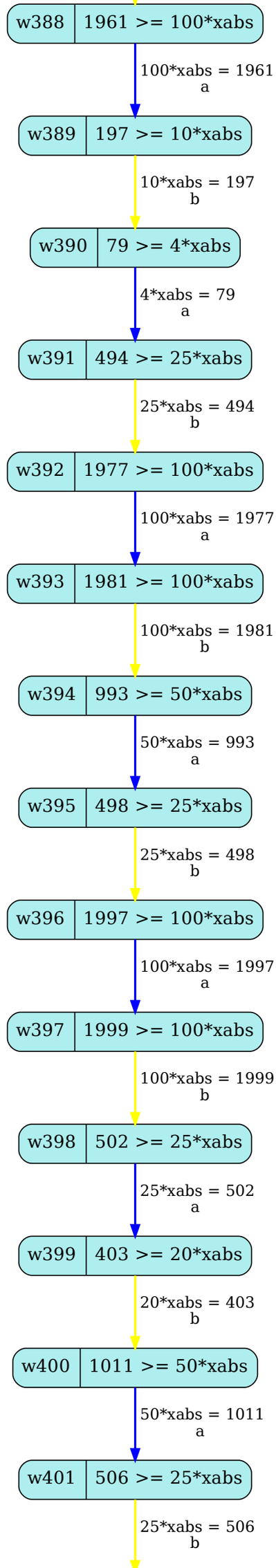
w388
1961 >= 100*xabs
100*xabs = 1961
a
w389
197 >= 10*xabs
10*xabs = 197
b
w390
79 >= 4*xabs
4*xabs = 79
a
w391
494 >= 25*xabs
25*xabs = 494
b
w392
1977 >= 100*xabs
100*xabs = 1977
a
w393
1981 >= 100*xabs
100*xabs = 1981
b
w394
993 >= 50*xabs
50*xabs = 993
a
w395
498 >= 25*xabs
25*xabs = 498
b
w396
1997 >= 100*xabs
100*xabs = 1997
a
w397
1999 >= 100*xabs
100*xabs = 1999
b
w398
502 >= 25*xabs
25*xabs = 502
a
w399
403 >= 20*xabs
20*xabs = 403
b
w400
1011 >= 50*xabs
50*xabs = 1011
a
w401
506 >= 25*xabs
25*xabs = 506
b

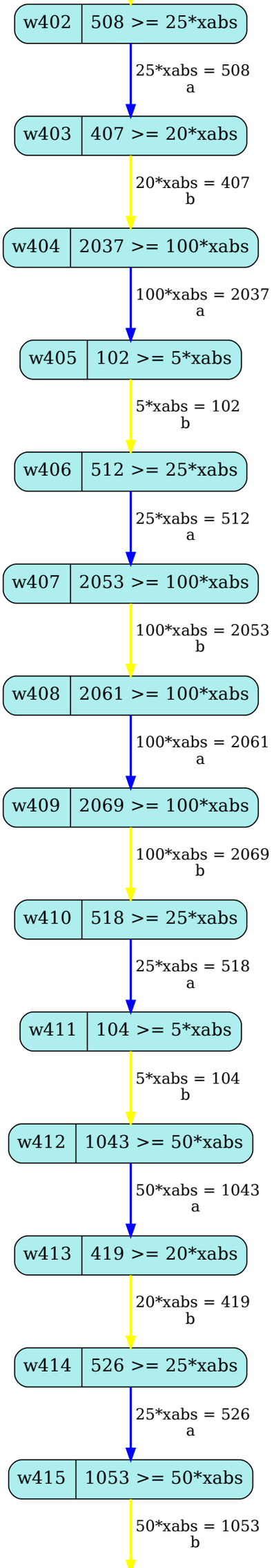
w402
508 >= 25*xabs
25*xabs = 508
a
w403
407 >= 20*xabs
20*xabs = 407
b
w404
2037 >= 100*xabs
100*xabs = 2037
a
w405
102 >= 5*xabs
5*xabs = 102
b
w406
512 >= 25*xabs
25*xabs = 512
a
w407
2053 >= 100*xabs
100*xabs = 2053
b
w408
2061 >= 100*xabs
100*xabs = 2061
a
w409
2069 >= 100*xabs
100*xabs = 2069
b
w410
518 >= 25*xabs
25*xabs = 518
a
w411
104 >= 5*xabs
5*xabs = 104
b
w412
1043 >= 50*xabs
50*xabs = 1043
a
w413
419 >= 20*xabs
20*xabs = 419
b
w414
526 >= 25*xabs
25*xabs = 526
a
w415
1053 >= 50*xabs
50*xabs = 1053
b

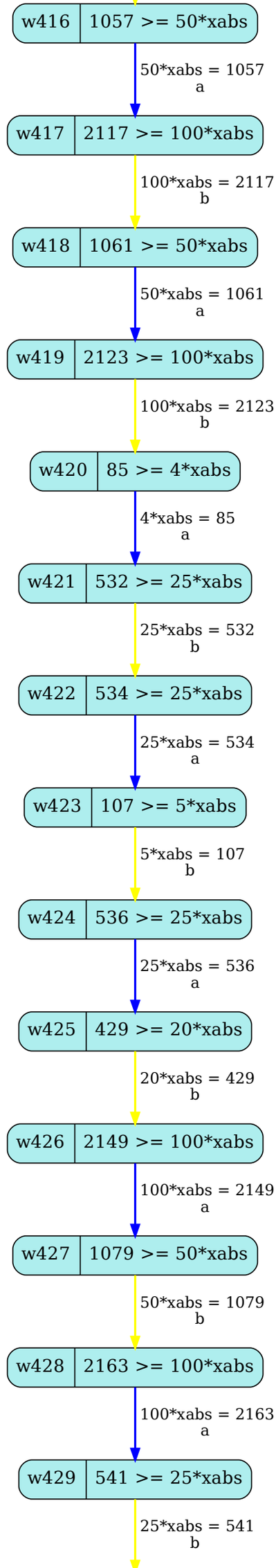
w416
1057 >= 50*xabs
50*xabs = 1057
a
w417
2117 >= 100*xabs
100*xabs = 2117
b
w418
1061 >= 50*xabs
50*xabs = 1061
a
w419
2123 >= 100*xabs
100*xabs = 2123
b
w420
85 >= 4*xabs
4*xabs = 85
a
w421
532 >= 25*xabs
25*xabs = 532
b
w422
534 >= 25*xabs
25*xabs = 534
a
w423
107 >= 5*xabs
5*xabs = 107
b
w424
536 >= 25*xabs
25*xabs = 536
a
w425
429 >= 20*xabs
20*xabs = 429
b
w426
2149 >= 100*xabs
100*xabs = 2149
a
w427
1079 >= 50*xabs
50*xabs = 1079
b
w428
2163 >= 100*xabs
100*xabs = 2163
a
w429
541 >= 25*xabs
25*xabs = 541
b

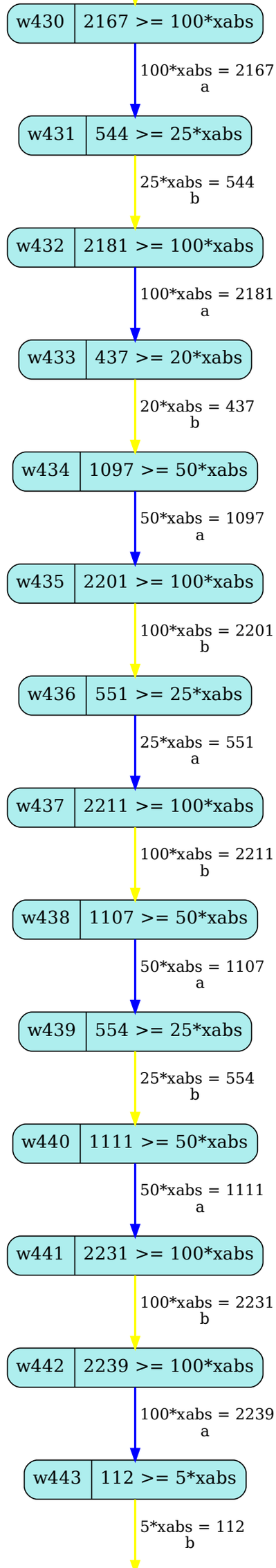
w430
2167 >= 100*xabs
100*xabs = 2167
a
w431
544 >= 25*xabs
25*xabs = 544
b
w432
2181 >= 100*xabs
100*xabs = 2181
a
w433
437 >= 20*xabs
20*xabs = 437
b
w434
1097 >= 50*xabs
50*xabs = 1097
a
w435
2201 >= 100*xabs
100*xabs = 2201
b
w436
551 >= 25*xabs
25*xabs = 551
a
w437
2211 >= 100*xabs
100*xabs = 2211
b
w438
1107 >= 50*xabs
50*xabs = 1107
a
w439
554 >= 25*xabs
25*xabs = 554
b
w440
1111 >= 50*xabs
50*xabs = 1111
a
w441
2231 >= 100*xabs
100*xabs = 2231
b
w442
2239 >= 100*xabs
100*xabs = 2239
a
w443
112 >= 5*xabs
5*xabs = 112
b

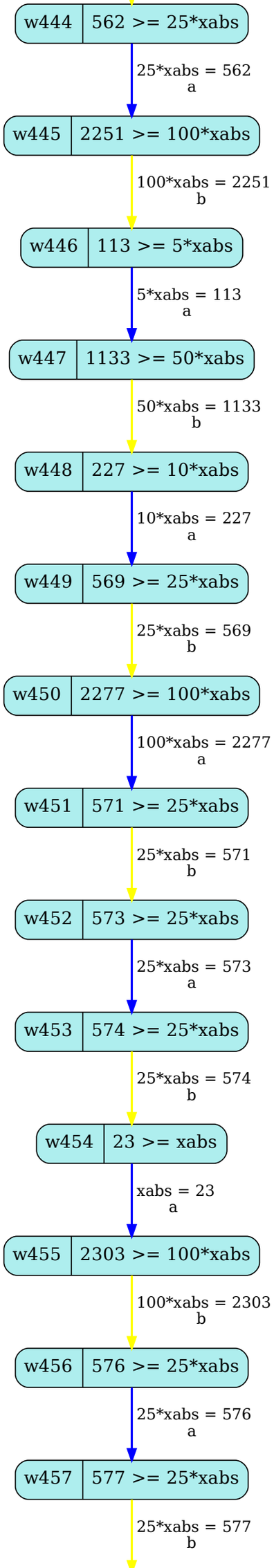
w444
562 >= 25*xabs
25*xabs = 562
a
w445
2251 >= 100*xabs
100*xabs = 2251
b
w446
113 >= 5*xabs
5*xabs = 113
a
w447
1133 >= 50*xabs
50*xabs = 1133
b
w448
227 >= 10*xabs
10*xabs = 227
a
w449
569 >= 25*xabs
25*xabs = 569
b
w450
2277 >= 100*xabs
100*xabs = 2277
a
w451
571 >= 25*xabs
25*xabs = 571
b
w452
573 >= 25*xabs
25*xabs = 573
a
w453
574 >= 25*xabs
25*xabs = 574
b
w454
23 >= xabs
xabs = 23
a
w455
2303 >= 100*xabs
100*xabs = 2303
b
w456
576 >= 25*xabs
25*xabs = 576
a
w457
577 >= 25*xabs
25*xabs = 577
b

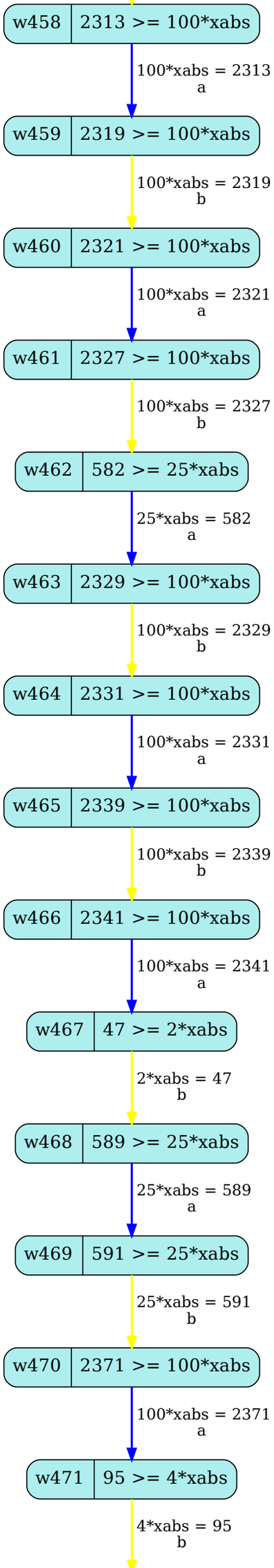
w458
2313 >= 100*xabs
100*xabs = 2313
a
w459
2319 >= 100*xabs
100*xabs = 2319
b
w460
2321 >= 100*xabs
100*xabs = 2321
a
w461
2327 >= 100*xabs
100*xabs = 2327
b
w462
582 >= 25*xabs
25*xabs = 582
a
w463
2329 >= 100*xabs
100*xabs = 2329
b
w464
2331 >= 100*xabs
100*xabs = 2331
a
w465
2339 >= 100*xabs
100*xabs = 2339
b
w466
2341 >= 100*xabs
100*xabs = 2341
a
w467
47 >= 2*xabs
2*xabs = 47
b
w468
589 >= 25*xabs
25*xabs = 589
a
w469
591 >= 25*xabs
25*xabs = 591
b
w470
2371 >= 100*xabs
100*xabs = 2371
a
w471
95 >= 4*xabs
4*xabs = 95
b

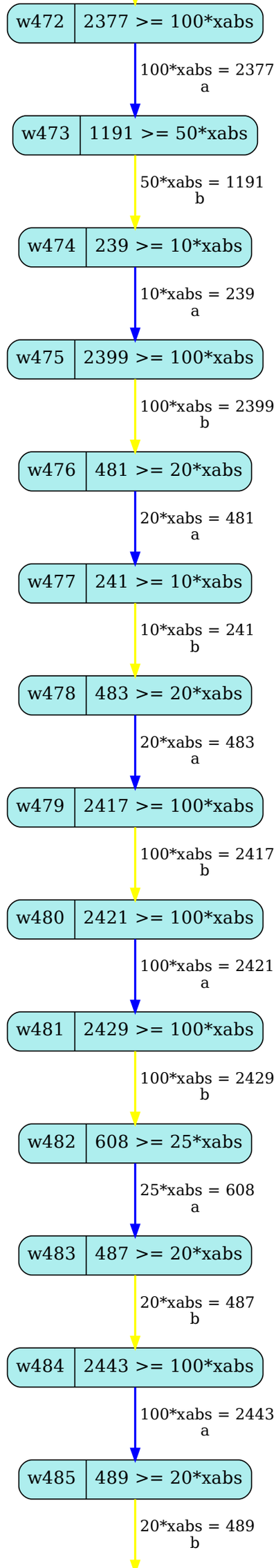
w472
2377 >= 100*xabs
100*xabs = 2377
a
w473
1191 >= 50*xabs
50*xabs = 1191
b
w474
239 >= 10*xabs
10*xabs = 239
a
w475
2399 >= 100*xabs
100*xabs = 2399
b
w476
481 >= 20*xabs
20*xabs = 481
a
w477
241 >= 10*xabs
10*xabs = 241
b
w478
483 >= 20*xabs
20*xabs = 483
a
w479
2417 >= 100*xabs
100*xabs = 2417
b
w480
2421 >= 100*xabs
100*xabs = 2421
a
w481
2429 >= 100*xabs
100*xabs = 2429
b
w482
608 >= 25*xabs
25*xabs = 608
a
w483
487 >= 20*xabs
20*xabs = 487
b
w484
2443 >= 100*xabs
100*xabs = 2443
a
w485
489 >= 20*xabs
20*xabs = 489
b

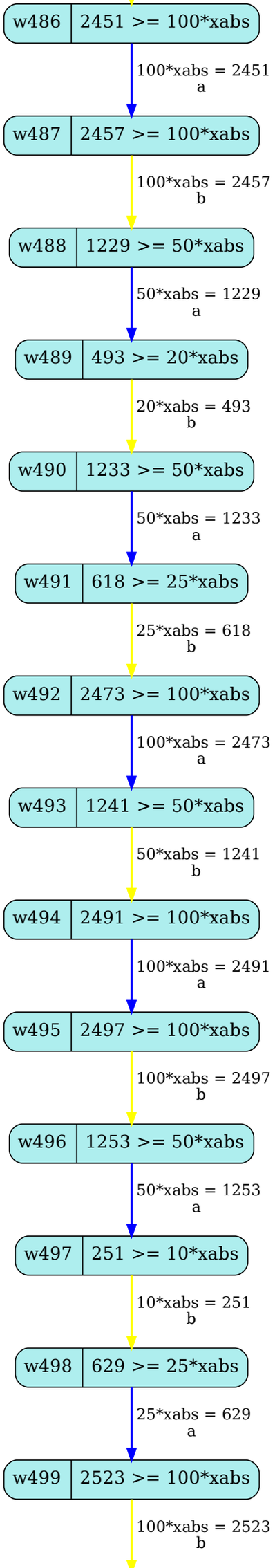
w486
2451 >= 100*xabs
100*xabs = 2451
a
w487
2457 >= 100*xabs
100*xabs = 2457
b
w488
1229 >= 50*xabs
50*xabs = 1229
a
w489
493 >= 20*xabs
20*xabs = 493
b
w490
1233 >= 50*xabs
50*xabs = 1233
a
w491
618 >= 25*xabs
25*xabs = 618
b
w492
2473 >= 100*xabs
100*xabs = 2473
a
w493
1241 >= 50*xabs
50*xabs = 1241
b
w494
2491 >= 100*xabs
100*xabs = 2491
a
w495
2497 >= 100*xabs
100*xabs = 2497
b
w496
1253 >= 50*xabs
50*xabs = 1253
a
w497
251 >= 10*xabs
10*xabs = 251
b
w498
629 >= 25*xabs
25*xabs = 629
a
w499
2523 >= 100*xabs
100*xabs = 2523
b

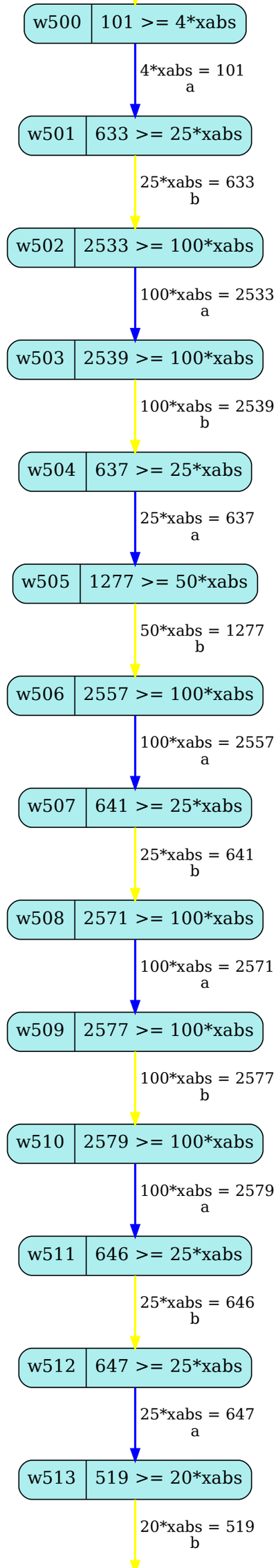
w500
101 >= 4*xabs
4*xabs = 101
a
w501
633 >= 25*xabs
25*xabs = 633
b
w502
2533 >= 100*xabs
100*xabs = 2533
a
w503
2539 >= 100*xabs
100*xabs = 2539
b
w504
637 >= 25*xabs
25*xabs = 637
a
w505
1277 >= 50*xabs
50*xabs = 1277
b
w506
2557 >= 100*xabs
100*xabs = 2557
a
w507
641 >= 25*xabs
25*xabs = 641
b
w508
2571 >= 100*xabs
100*xabs = 2571
a
w509
2577 >= 100*xabs
100*xabs = 2577
b
w510
2579 >= 100*xabs
100*xabs = 2579
a
w511
646 >= 25*xabs
25*xabs = 646
b
w512
647 >= 25*xabs
25*xabs = 647
a
w513
519 >= 20*xabs
20*xabs = 519
b

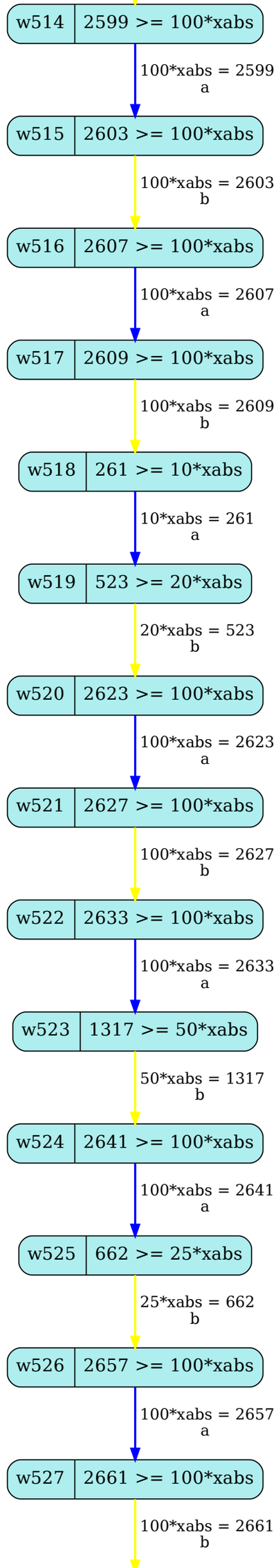
w514
2599 >= 100*xabs
100*xabs = 2599
a
w515
2603 >= 100*xabs
100*xabs = 2603
b
w516
2607 >= 100*xabs
100*xabs = 2607
a
w517
2609 >= 100*xabs
100*xabs = 2609
b
w518
261 >= 10*xabs
10*xabs = 261
a
w519
523 >= 20*xabs
20*xabs = 523
b
w520
2623 >= 100*xabs
100*xabs = 2623
a
w521
2627 >= 100*xabs
100*xabs = 2627
b
w522
2633 >= 100*xabs
100*xabs = 2633
a
w523
1317 >= 50*xabs
50*xabs = 1317
b
w524
2641 >= 100*xabs
100*xabs = 2641
a
w525
662 >= 25*xabs
25*xabs = 662
b
w526
2657 >= 100*xabs
100*xabs = 2657
a
w527
2661 >= 100*xabs
100*xabs = 2661
b

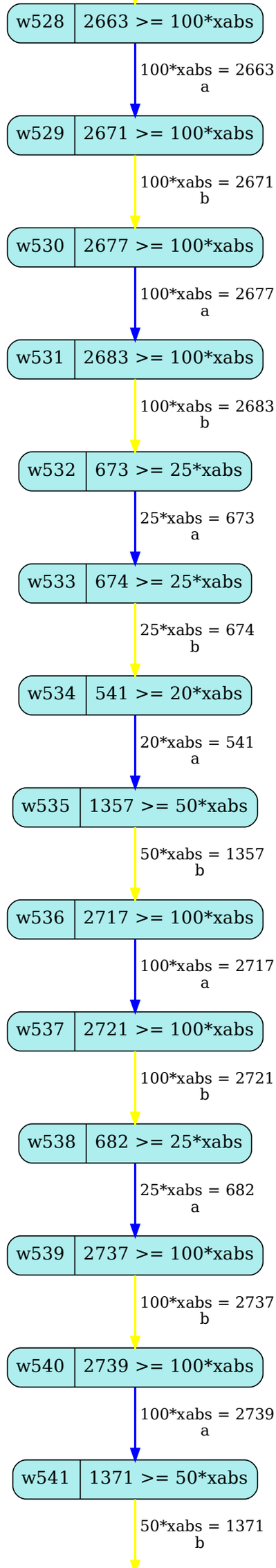
w528
2663 >= 100*xabs
100*xabs = 2663
a
w529
2671 >= 100*xabs
100*xabs = 2671
b
w530
2677 >= 100*xabs
100*xabs = 2677
a
w531
2683 >= 100*xabs
100*xabs = 2683
b
w532
673 >= 25*xabs
25*xabs = 673
a
w533
674 >= 25*xabs
25*xabs = 674
b
w534
541 >= 20*xabs
20*xabs = 541
a
w535
1357 >= 50*xabs
50*xabs = 1357
b
w536
2717 >= 100*xabs
100*xabs = 2717
a
w537
2721 >= 100*xabs
100*xabs = 2721
b
w538
682 >= 25*xabs
25*xabs = 682
a
w539
2737 >= 100*xabs
100*xabs = 2737
b
w540
2739 >= 100*xabs
100*xabs = 2739
a
w541
1371 >= 50*xabs
50*xabs = 1371
b

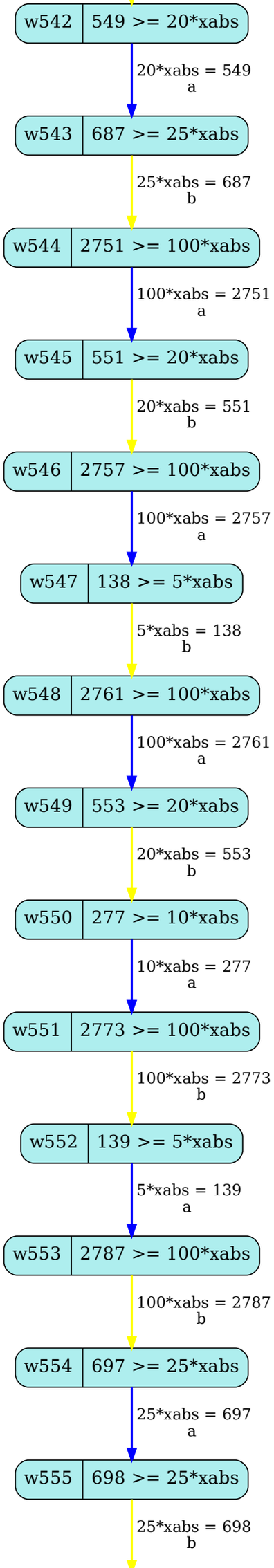
w542
549 >= 20*xabs
20*xabs = 549
a
w543
687 >= 25*xabs
25*xabs = 687
b
w544
2751 >= 100*xabs
100*xabs = 2751
a
w545
551 >= 20*xabs
20*xabs = 551
b
w546
2757 >= 100*xabs
100*xabs = 2757
a
w547
138 >= 5*xabs
5*xabs = 138
b
w548
2761 >= 100*xabs
100*xabs = 2761
a
w549
553 >= 20*xabs
20*xabs = 553
b
w550
277 >= 10*xabs
10*xabs = 277
a
w551
2773 >= 100*xabs
100*xabs = 2773
b
w552
139 >= 5*xabs
5*xabs = 139
a
w553
2787 >= 100*xabs
100*xabs = 2787
b
w554
697 >= 25*xabs
25*xabs = 697
a
w555
698 >= 25*xabs
25*xabs = 698
b

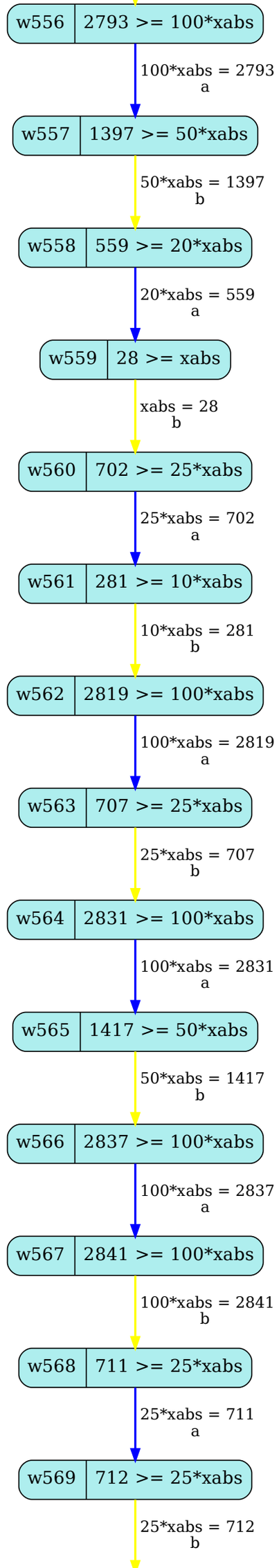
w556
2793 >= 100*xabs
100*xabs = 2793
a
w557
1397 >= 50*xabs
50*xabs = 1397
b
w558
559 >= 20*xabs
20*xabs = 559
a
w559
28 >= xabs
xabs = 28
b
w560
702 >= 25*xabs
25*xabs = 702
a
w561
281 >= 10*xabs
10*xabs = 281
b
w562
2819 >= 100*xabs
100*xabs = 2819
a
w563
707 >= 25*xabs
25*xabs = 707
b
w564
2831 >= 100*xabs
100*xabs = 2831
a
w565
1417 >= 50*xabs
50*xabs = 1417
b
w566
2837 >= 100*xabs
100*xabs = 2837
a
w567
2841 >= 100*xabs
100*xabs = 2841
b
w568
711 >= 25*xabs
25*xabs = 711
a
w569
712 >= 25*xabs
25*xabs = 712
b

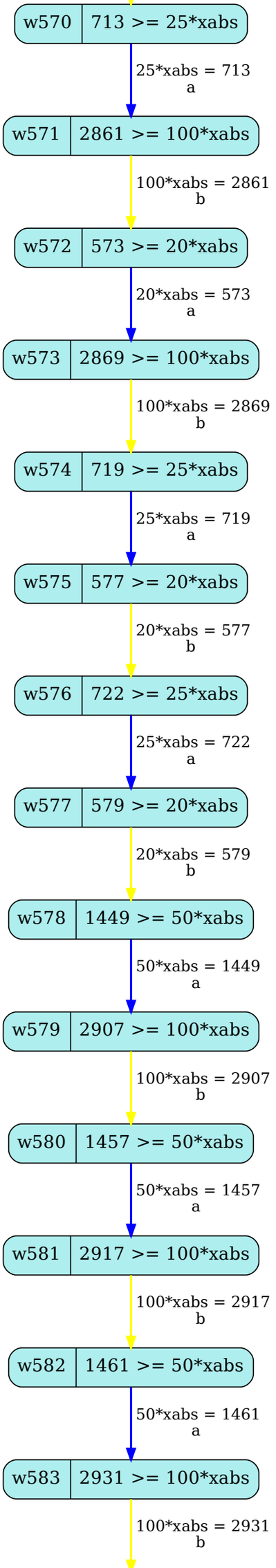
w570
713 >= 25*xabs
25*xabs = 713
a
w571
2861 >= 100*xabs
100*xabs = 2861
b
w572
573 >= 20*xabs
20*xabs = 573
a
w573
2869 >= 100*xabs
100*xabs = 2869
b
w574
719 >= 25*xabs
25*xabs = 719
a
w575
577 >= 20*xabs
20*xabs = 577
b
w576
722 >= 25*xabs
25*xabs = 722
a
w577
579 >= 20*xabs
20*xabs = 579
b
w578
1449 >= 50*xabs
50*xabs = 1449
a
w579
2907 >= 100*xabs
100*xabs = 2907
b
w580
1457 >= 50*xabs
50*xabs = 1457
a
w581
2917 >= 100*xabs
100*xabs = 2917
b
w582
1461 >= 50*xabs
50*xabs = 1461
a
w583
2931 >= 100*xabs
100*xabs = 2931
b

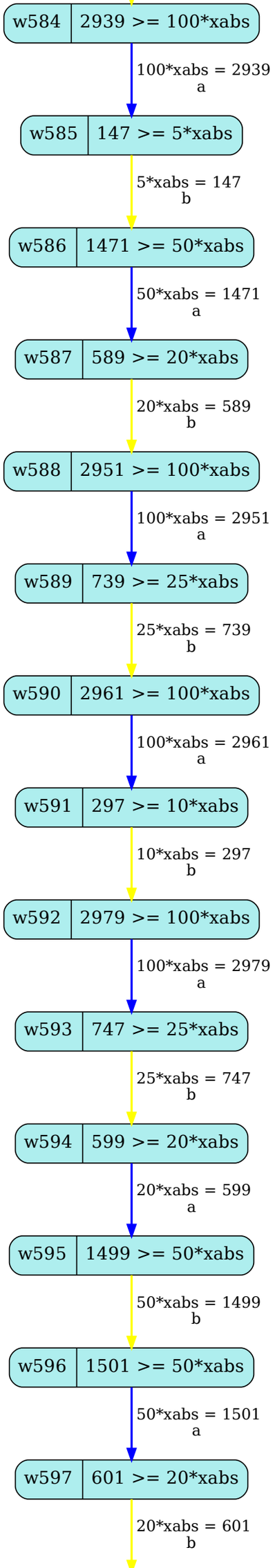
w584
2939 >= 100*xabs
100*xabs = 2939
a
w585
147 >= 5*xabs
5*xabs = 147
b
w586
1471 >= 50*xabs
50*xabs = 1471
a
w587
589 >= 20*xabs
20*xabs = 589
b
w588
2951 >= 100*xabs
100*xabs = 2951
a
w589
739 >= 25*xabs
25*xabs = 739
b
w590
2961 >= 100*xabs
100*xabs = 2961
a
w591
297 >= 10*xabs
10*xabs = 297
b
w592
2979 >= 100*xabs
100*xabs = 2979
a
w593
747 >= 25*xabs
25*xabs = 747
b
w594
599 >= 20*xabs
20*xabs = 599
a
w595
1499 >= 50*xabs
50*xabs = 1499
b
w596
1501 >= 50*xabs
50*xabs = 1501
a
w597
601 >= 20*xabs
20*xabs = 601
b

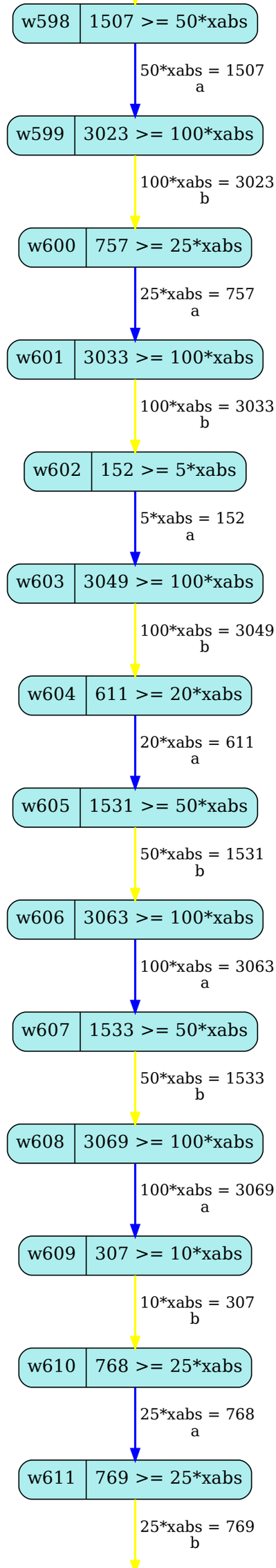
w598
1507 >= 50*xabs
50*xabs = 1507
a
w599
3023 >= 100*xabs
100*xabs = 3023
b
w600
757 >= 25*xabs
25*xabs = 757
a
w601
3033 >= 100*xabs
100*xabs = 3033
b
w602
152 >= 5*xabs
5*xabs = 152
a
w603
3049 >= 100*xabs
100*xabs = 3049
b
w604
611 >= 20*xabs
20*xabs = 611
a
w605
1531 >= 50*xabs
50*xabs = 1531
b
w606
3063 >= 100*xabs
100*xabs = 3063
a
w607
1533 >= 50*xabs
50*xabs = 1533
b
w608
3069 >= 100*xabs
100*xabs = 3069
a
w609
307 >= 10*xabs
10*xabs = 307
b
w610
768 >= 25*xabs
25*xabs = 768
a
w611
769 >= 25*xabs
25*xabs = 769
b

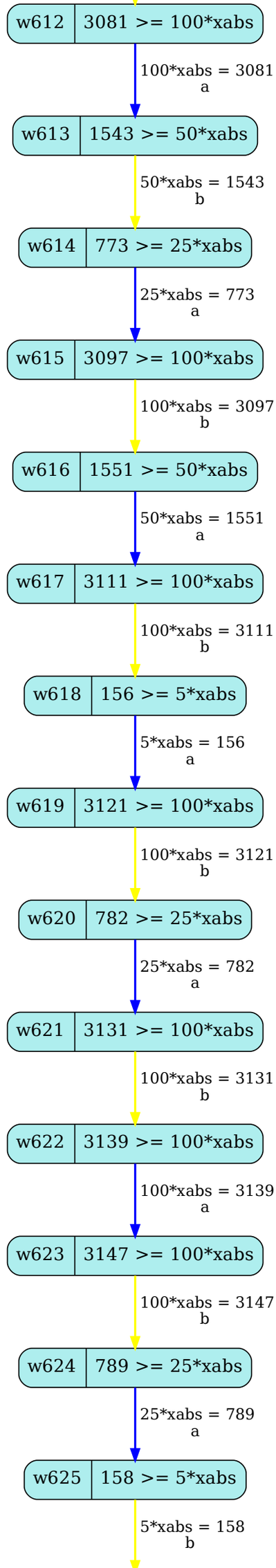
w612
3081 >= 100*xabs
100*xabs = 3081
a
w613
1543 >= 50*xabs
50*xabs = 1543
b
w614
773 >= 25*xabs
25*xabs = 773
a
w615
3097 >= 100*xabs
100*xabs = 3097
b
w616
1551 >= 50*xabs
50*xabs = 1551
a
w617
3111 >= 100*xabs
100*xabs = 3111
b
w618
156 >= 5*xabs
5*xabs = 156
a
w619
3121 >= 100*xabs
100*xabs = 3121
b
w620
782 >= 25*xabs
25*xabs = 782
a
w621
3131 >= 100*xabs
100*xabs = 3131
b
w622
3139 >= 100*xabs
100*xabs = 3139
a
w623
3147 >= 100*xabs
100*xabs = 3147
b
w624
789 >= 25*xabs
25*xabs = 789
a
w625
158 >= 5*xabs
5*xabs = 158
b

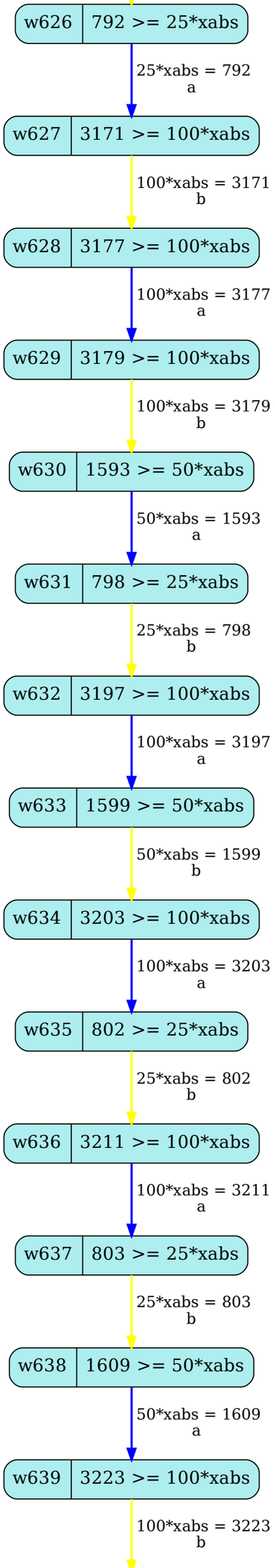
w626
792 >= 25*xabs
25*xabs = 792
a
w627
3171 >= 100*xabs
100*xabs = 3171
b
w628
3177 >= 100*xabs
100*xabs = 3177
a
w629
3179 >= 100*xabs
100*xabs = 3179
b
w630
1593 >= 50*xabs
50*xabs = 1593
a
w631
798 >= 25*xabs
25*xabs = 798
b
w632
3197 >= 100*xabs
100*xabs = 3197
a
w633
1599 >= 50*xabs
50*xabs = 1599
b
w634
3203 >= 100*xabs
100*xabs = 3203
a
w635
802 >= 25*xabs
25*xabs = 802
b
w636
3211 >= 100*xabs
100*xabs = 3211
a
w637
803 >= 25*xabs
25*xabs = 803
b
w638
1609 >= 50*xabs
50*xabs = 1609
a
w639
3223 >= 100*xabs
100*xabs = 3223
b

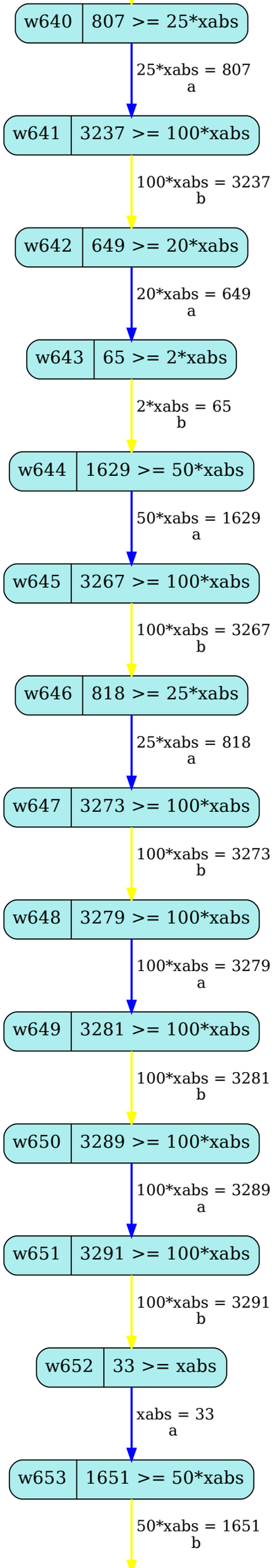
w640
807 >= 25*xabs
25*xabs = 807
a
w641
3237 >= 100*xabs
100*xabs = 3237
b
w642
649 >= 20*xabs
20*xabs = 649
a
w643
65 >= 2*xabs
2*xabs = 65
b
w644
1629 >= 50*xabs
50*xabs = 1629
a
w645
3267 >= 100*xabs
100*xabs = 3267
b
w646
818 >= 25*xabs
25*xabs = 818
a
w647
3273 >= 100*xabs
100*xabs = 3273
b
w648
3279 >= 100*xabs
100*xabs = 3279
a
w649
3281 >= 100*xabs
100*xabs = 3281
b
w650
3289 >= 100*xabs
100*xabs = 3289
a
w651
3291 >= 100*xabs
100*xabs = 3291
b
w652
33 >= xabs
xabs = 33
a
w653
1651 >= 50*xabs
50*xabs = 1651
b

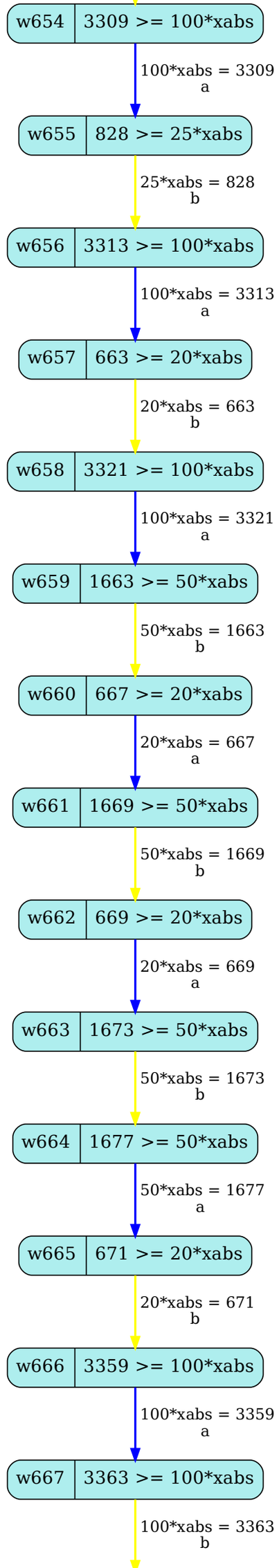
w654
3309 >= 100*xabs
100*xabs = 3309
a
w655
828 >= 25*xabs
25*xabs = 828
b
w656
3313 >= 100*xabs
100*xabs = 3313
a
w657
663 >= 20*xabs
20*xabs = 663
b
w658
3321 >= 100*xabs
100*xabs = 3321
a
w659
1663 >= 50*xabs
50*xabs = 1663
b
w660
667 >= 20*xabs
20*xabs = 667
a
w661
1669 >= 50*xabs
50*xabs = 1669
b
w662
669 >= 20*xabs
20*xabs = 669
a
w663
1673 >= 50*xabs
50*xabs = 1673
b
w664
1677 >= 50*xabs
50*xabs = 1677
a
w665
671 >= 20*xabs
20*xabs = 671
b
w666
3359 >= 100*xabs
100*xabs = 3359
a
w667
3363 >= 100*xabs
100*xabs = 3363
b

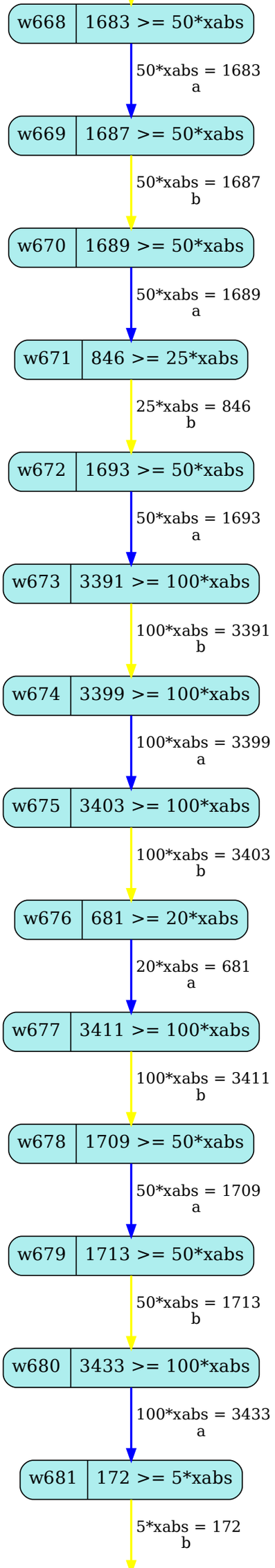
w668
1683 >= 50*xabs
50*xabs = 1683
a
w669
1687 >= 50*xabs
50*xabs = 1687
b
w670
1689 >= 50*xabs
50*xabs = 1689
a
w671
846 >= 25*xabs
25*xabs = 846
b
w672
1693 >= 50*xabs
50*xabs = 1693
a
w673
3391 >= 100*xabs
100*xabs = 3391
b
w674
3399 >= 100*xabs
100*xabs = 3399
a
w675
3403 >= 100*xabs
100*xabs = 3403
b
w676
681 >= 20*xabs
20*xabs = 681
a
w677
3411 >= 100*xabs
100*xabs = 3411
b
w678
1709 >= 50*xabs
50*xabs = 1709
a
w679
1713 >= 50*xabs
50*xabs = 1713
b
w680
3433 >= 100*xabs
100*xabs = 3433
a
w681
172 >= 5*xabs
5*xabs = 172
b

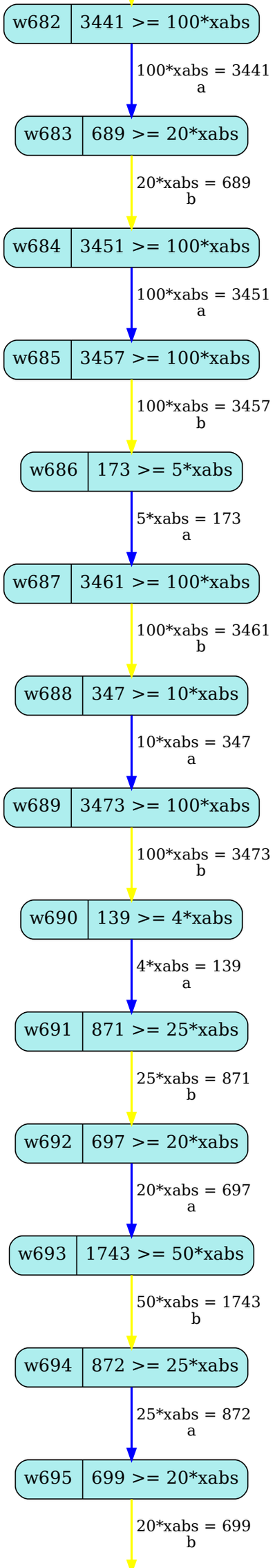
w682
3441 >= 100*xabs
100*xabs = 3441
a
w683
689 >= 20*xabs
20*xabs = 689
b
w684
3451 >= 100*xabs
100*xabs = 3451
a
w685
3457 >= 100*xabs
100*xabs = 3457
b
w686
173 >= 5*xabs
5*xabs = 173
a
w687
3461 >= 100*xabs
100*xabs = 3461
b
w688
347 >= 10*xabs
10*xabs = 347
a
w689
3473 >= 100*xabs
100*xabs = 3473
b
w690
139 >= 4*xabs
4*xabs = 139
a
w691
871 >= 25*xabs
25*xabs = 871
b
w692
697 >= 20*xabs
20*xabs = 697
a
w693
1743 >= 50*xabs
50*xabs = 1743
b
w694
872 >= 25*xabs
25*xabs = 872
a
w695
699 >= 20*xabs
20*xabs = 699
b

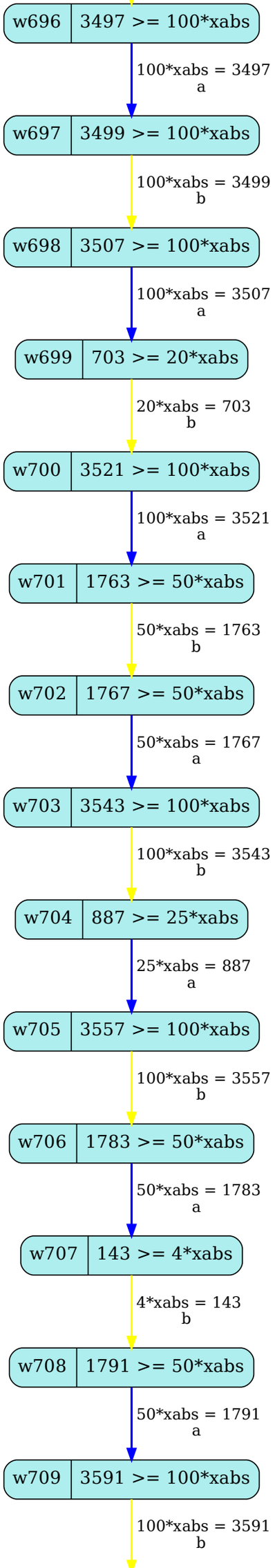
w696
3497 >= 100*xabs
100*xabs = 3497
a
w697
3499 >= 100*xabs
100*xabs = 3499
b
w698
3507 >= 100*xabs
100*xabs = 3507
a
w699
703 >= 20*xabs
20*xabs = 703
b
w700
3521 >= 100*xabs
100*xabs = 3521
a
w701
1763 >= 50*xabs
50*xabs = 1763
b
w702
1767 >= 50*xabs
50*xabs = 1767
a
w703
3543 >= 100*xabs
100*xabs = 3543
b
w704
887 >= 25*xabs
25*xabs = 887
a
w705
3557 >= 100*xabs
100*xabs = 3557
b
w706
1783 >= 50*xabs
50*xabs = 1783
a
w707
143 >= 4*xabs
4*xabs = 143
b
w708
1791 >= 50*xabs
50*xabs = 1791
a
w709
3591 >= 100*xabs
100*xabs = 3591
b

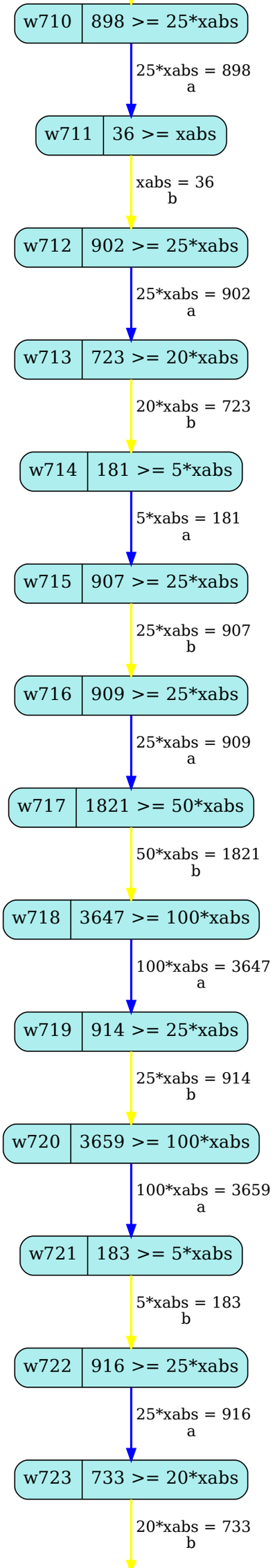
w710
898 >= 25*xabs
25*xabs = 898
a
w711
36 >= xabs
xabs = 36
b
w712
902 >= 25*xabs
25*xabs = 902
a
w713
723 >= 20*xabs
20*xabs = 723
b
w714
181 >= 5*xabs
5*xabs = 181
a
w715
907 >= 25*xabs
25*xabs = 907
b
w716
909 >= 25*xabs
25*xabs = 909
a
w717
1821 >= 50*xabs
50*xabs = 1821
b
w718
3647 >= 100*xabs
100*xabs = 3647
a
w719
914 >= 25*xabs
25*xabs = 914
b
w720
3659 >= 100*xabs
100*xabs = 3659
a
w721
183 >= 5*xabs
5*xabs = 183
b
w722
916 >= 25*xabs
25*xabs = 916
a
w723
733 >= 20*xabs
20*xabs = 733
b

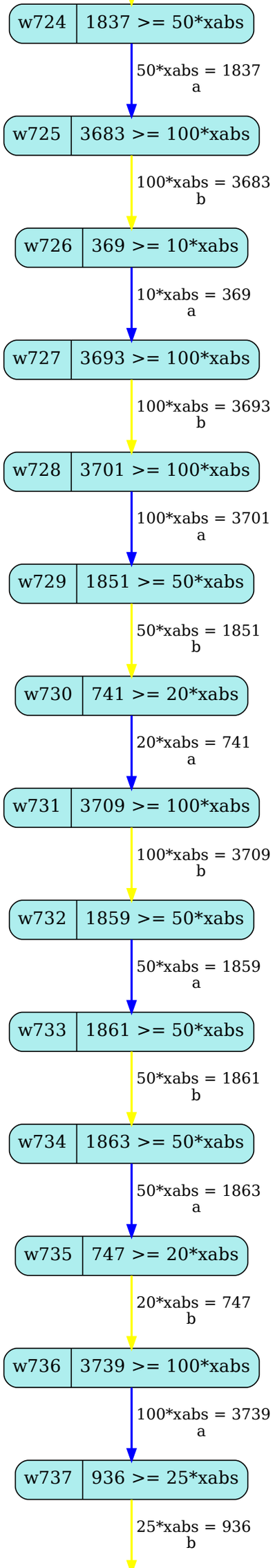
w724
1837 >= 50*xabs
50*xabs = 1837
a
w725
3683 >= 100*xabs
100*xabs = 3683
b
w726
369 >= 10*xabs
10*xabs = 369
a
w727
3693 >= 100*xabs
100*xabs = 3693
b
w728
3701 >= 100*xabs
100*xabs = 3701
a
w729
1851 >= 50*xabs
50*xabs = 1851
b
w730
741 >= 20*xabs
20*xabs = 741
a
w731
3709 >= 100*xabs
100*xabs = 3709
b
w732
1859 >= 50*xabs
50*xabs = 1859
a
w733
1861 >= 50*xabs
50*xabs = 1861
b
w734
1863 >= 50*xabs
50*xabs = 1863
a
w735
747 >= 20*xabs
20*xabs = 747
b
w736
3739 >= 100*xabs
100*xabs = 3739
a
w737
936 >= 25*xabs
25*xabs = 936
b

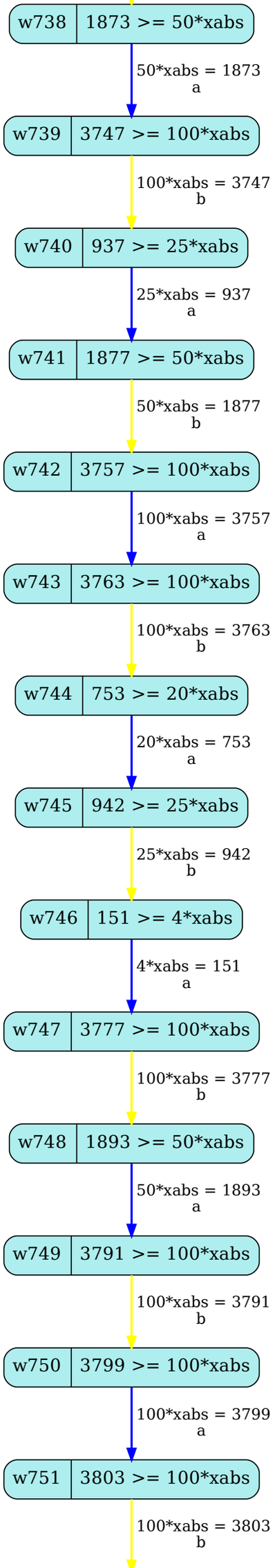
w738
1873 >= 50*xabs
50*xabs = 1873
a
w739
3747 >= 100*xabs
100*xabs = 3747
b
w740
937 >= 25*xabs
25*xabs = 937
a
w741
1877 >= 50*xabs
50*xabs = 1877
b
w742
3757 >= 100*xabs
100*xabs = 3757
a
w743
3763 >= 100*xabs
100*xabs = 3763
b
w744
753 >= 20*xabs
20*xabs = 753
a
w745
942 >= 25*xabs
25*xabs = 942
b
w746
151 >= 4*xabs
4*xabs = 151
a
w747
3777 >= 100*xabs
100*xabs = 3777
b
w748
1893 >= 50*xabs
50*xabs = 1893
a
w749
3791 >= 100*xabs
100*xabs = 3791
b
w750
3799 >= 100*xabs
100*xabs = 3799
a
w751
3803 >= 100*xabs
100*xabs = 3803
b

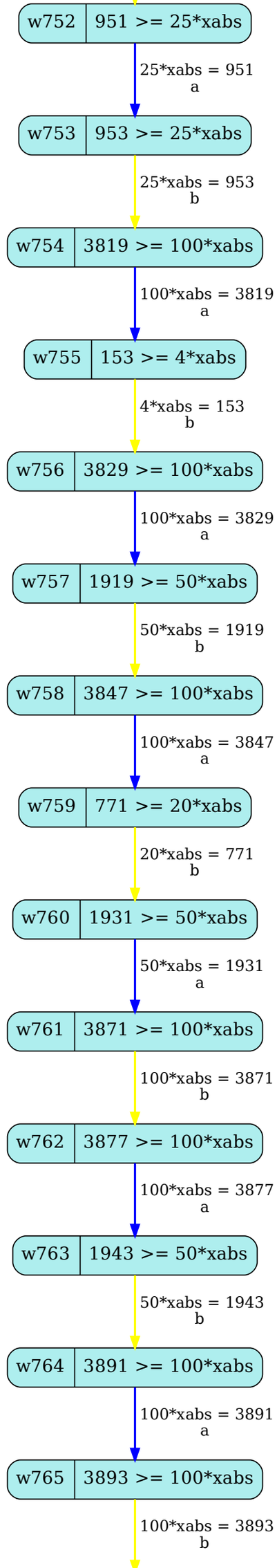
w752
951 >= 25*xabs
25*xabs = 951
a
w753
953 >= 25*xabs
25*xabs = 953
b
w754
3819 >= 100*xabs
100*xabs = 3819
a
w755
153 >= 4*xabs
4*xabs = 153
b
w756
3829 >= 100*xabs
100*xabs = 3829
a
w757
1919 >= 50*xabs
50*xabs = 1919
b
w758
3847 >= 100*xabs
100*xabs = 3847
a
w759
771 >= 20*xabs
20*xabs = 771
b
w760
1931 >= 50*xabs
50*xabs = 1931
a
w761
3871 >= 100*xabs
100*xabs = 3871
b
w762
3877 >= 100*xabs
100*xabs = 3877
a
w763
1943 >= 50*xabs
50*xabs = 1943
b
w764
3891 >= 100*xabs
100*xabs = 3891
a
w765
3893 >= 100*xabs
100*xabs = 3893
b

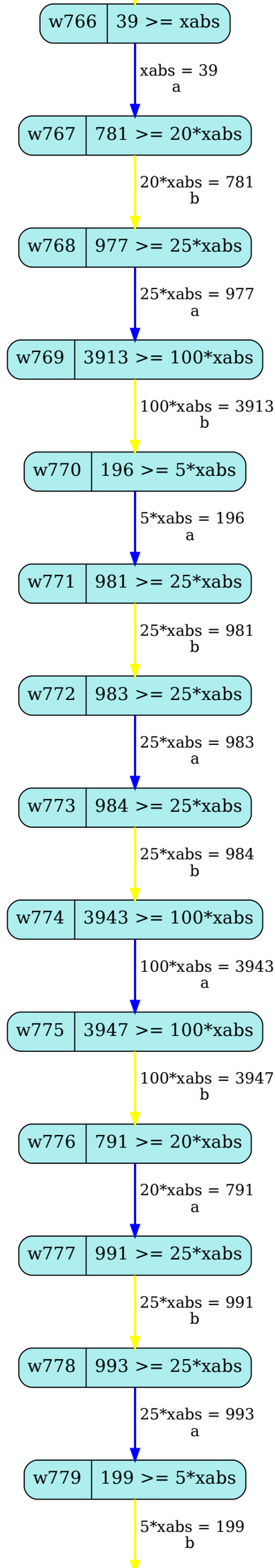
w766
39 >= xabs
xabs = 39
a
w767
781 >= 20*xabs
20*xabs = 781
b
w768
977 >= 25*xabs
25*xabs = 977
a
w769
3913 >= 100*xabs
100*xabs = 3913
b
w770
196 >= 5*xabs
5*xabs = 196
a
w771
981 >= 25*xabs
25*xabs = 981
b
w772
983 >= 25*xabs
25*xabs = 983
a
w773
984 >= 25*xabs
25*xabs = 984
b
w774
3943 >= 100*xabs
100*xabs = 3943
a
w775
3947 >= 100*xabs
100*xabs = 3947
b
w776
791 >= 20*xabs
20*xabs = 791
a
w777
991 >= 25*xabs
25*xabs = 991
b
w778
993 >= 25*xabs
25*xabs = 993
a
w779
199 >= 5*xabs
5*xabs = 199
b

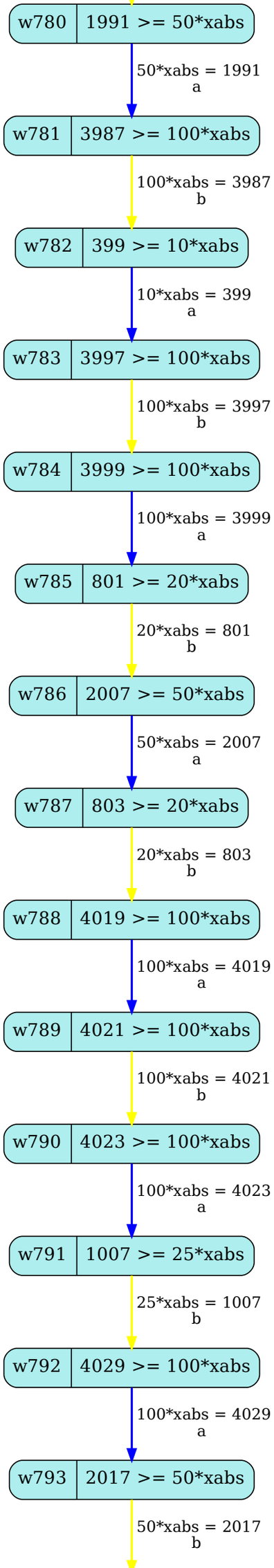
w780
1991 >= 50*xabs
50*xabs = 1991
a
w781
3987 >= 100*xabs
100*xabs = 3987
b
w782
399 >= 10*xabs
10*xabs = 399
a
w783
3997 >= 100*xabs
100*xabs = 3997
b
w784
3999 >= 100*xabs
100*xabs = 3999
a
w785
801 >= 20*xabs
20*xabs = 801
b
w786
2007 >= 50*xabs
50*xabs = 2007
a
w787
803 >= 20*xabs
20*xabs = 803
b
w788
4019 >= 100*xabs
100*xabs = 4019
a
w789
4021 >= 100*xabs
100*xabs = 4021
b
w790
4023 >= 100*xabs
100*xabs = 4023
a
w791
1007 >= 25*xabs
25*xabs = 1007
b
w792
4029 >= 100*xabs
100*xabs = 4029
a
w793
2017 >= 50*xabs
50*xabs = 2017
b

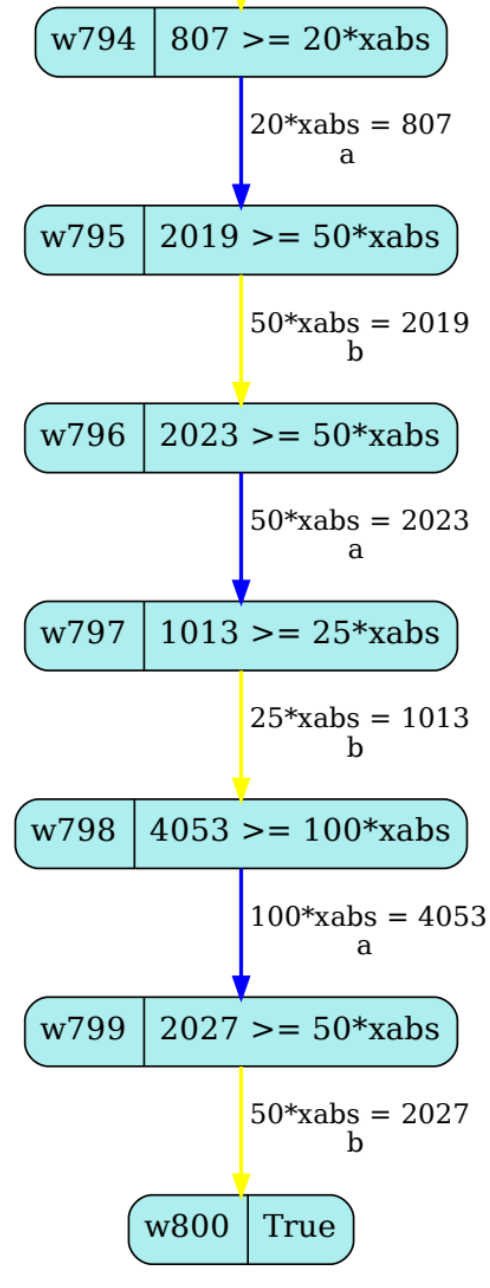
w794
807 >= 20*xabs
20*xabs = 807
a
w795
2019 >= 50*xabs
50*xabs = 2019
b
w796
2023 >= 50*xabs
50*xabs = 2023
a
w797
1013 >= 25*xabs
25*xabs = 1013
b
w798
4053 >= 100*xabs
100*xabs = 4053
a
w799
2027 >= 50*xabs
50*xabs = 2027
b
w800
True